PRINCIPLE MULTIPLE OUTPUT BOTH SIDE GEAR WITH HARMONIC TRANSMISSION

NAČELO VIŠESTRUKOG IZLAZA OBOSTRANOG OZUBLJENJA S HARMONIJSKIM PRIJENOSOM

Jozef HAĽKO, **Jozef MAŠČENIK** [1)]

Ključne riječi: harmonijski prijenos, mehanizam prijenosa, prijenosni omjer

Key words: harmonic transmission, transmission mechanism, transmission ratio

Sažetak: Rad prikazuje konstrukcijsko načelo višestrukog izlaza (odgona) obostranog diferencijalnih prijenosa s integriranim harmonijskim prijenosom. Prikazano načelo omogućava višestruke koaksijalne izlaze (odgone) s alternativnom izmjenom ulaza (pogona) i izlaza (odgona).

Abstract: The paper presents the design of the principle of multiple output both side differential transmissions with integrated harmonic transmission. The presented principle enables more coincidental coaxial outputs with the alternative of input and output interchange.

[1)] Faculty of Manufacturing Technologies, TU Košice with seat in Prešov, Štúrova 31, 08001 Prešov, Slovak Republic
jozef.halko@tuke.sk, jozef.mascenik@tuke.sk

1. INTRODUCTION

Department of technological equipment design of the FVT of the TU in Košice within the process of searching for alternatives to the so-called high precision transmissions of the constructions based on cycloidal teeth with the relatively complicated transmission of movement from satellite to centric has aimed it research at the new principles for design with relatively simple transmission of movement as well as presented transmissions regarding the number and range of transmission ratios.

The principle of integrated harmonic transmission with the multiple both side outputs has been suggested.

The paper also presents the kinematic analysis of the designed construction with transmission ratios for the certain levels.

2. PRINCIPLE OF MULTIPLE BOTH SIDE OUTPUT TRANSMISSIONS WITH INTEGRATED HARMONIC TRANSMISSION

Modern standard harmonic transmissions are usually designed as one-way with the only input and output without the possibility of their interchange.

The suggested multiple output transmission with integrated harmonic transmission is considered to be the new design with the variants of one input and three outputs with one braking of one of the transmission members. With the two levels of latitude, the transmission can operate as a differential. Output shafts are possible on both sides.

From the design principle it follows that alternative transmission from input shaft to the three output shafts (members) is achieved by means of one one-level transmission integrally interconnected with the two two-level transmissions within one construction of the whole transmission mechanism (fig. 1). Transmission of revolutions and performance for the suggested design is possible in two alternatives with the possible determination of corresponding transmission ratios.

2.1 The first alternative

Transmission of revolutions and performance is possible through the input eccentric shaft I, where fulcrum wheel 2 and 7 is located with gearing z_2 and z_9 and firmly connected gearing z_5 and z_7, meshing with gearing z_6 eventually z_8 connected with the output shafts II, V.

The next output is possible either through the flexible member (disk wheel) 3 to the output shaft III, or through the crown wheel 4 connected with the output shaft IV. The second output is done through the flexible member 3 with the internal gear z_{3a} and external gear z_{3b}.

Thus, gearing z_2 and z_9 of the wheel 2 and 7 meshes with internal gear z_{3a} of the flexible member 3 and consequently the flexible member by means of external gear z_{3b} meshes with the internal gear z_4 of the non-flexible member of the crown wheel 4. If the crown wheel 4 is braked, corresponding performance of the third output is transmitted to the shaft III by means of the flexible member 3. If the flexible member 3 is braked, performance is transmitted by means of the member 4 to the shaft IV.

2.2 The second alternative

To transmit revolutions and performance, the driveshaft II can be used. Then shafts I, III, V can be the input members, if the member 4 eventually I, IV, V is braked, if the member 3 is braked. Analogically it is possible to determine output shafts, if shaft V is a driveshaft.

Fig. 2 shows kinematic ratios between members 2 and 3 and consequently transmission

ratios for the first and the second alternatives have been derived.

3. TRANSMISSION RATIOS FOR THE FIRST ALTERNATIVE – SHAFT I IS A DRIVESHAFT

3.1 Transmission ratios when member 3 is braked, $n_3 = 0$

a) Transmission ratio between shaft I and gear wheel 2 if the flexible member 3 is braked. The analogue relations are also between shaft I and gear wheel 7. From the kinematic ratios shown in fig. 2 it follows that for the velocity vector at point A the following is valid:

$$\bar{v}_{A2O} = \bar{v}_{A3O} \tag{1}$$

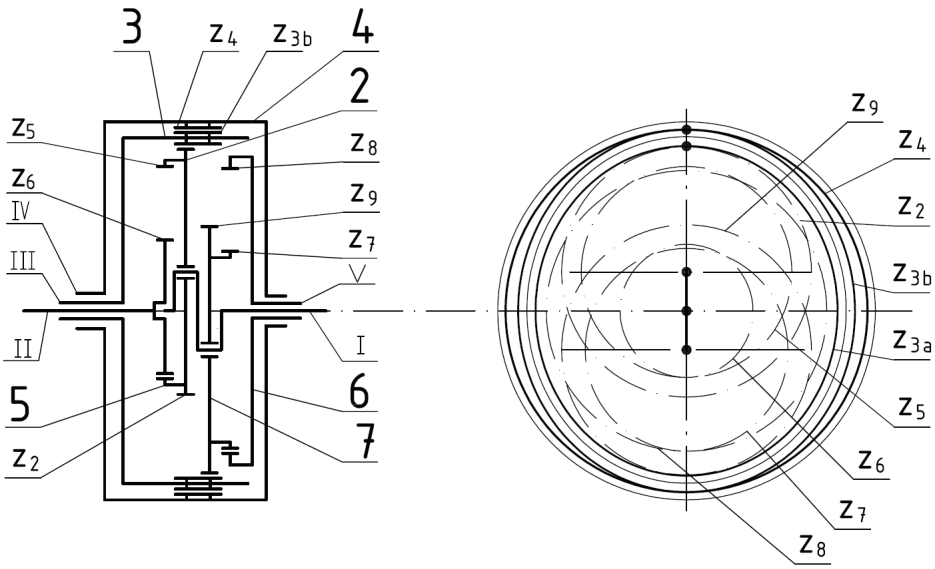

Fig. 1 Principle of integrated harmonic transmission mechanism

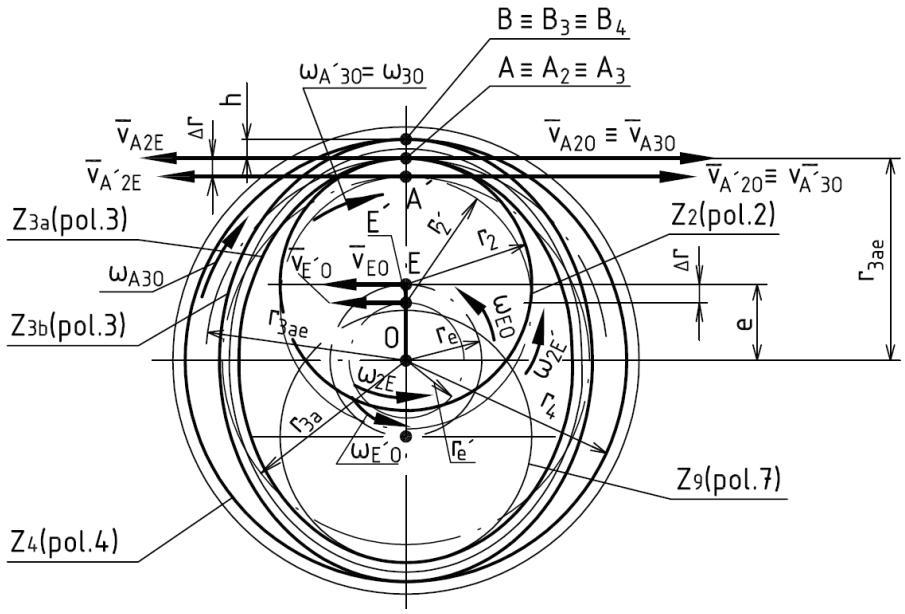

Fig. 2

At point A the pitch circle of the gearing z_2 of the member 2 touches the pitch ellipse of gearing z_{3a} of the deformed member 3, basic shape of which is circle with pitch circle radius r_{3a}, of the gearing z_{3a}. At the same time, meshing of gearing z_4 of the member 4 with gearing z_{3b} of the member 3 at point B occurs. At this point the pitch circle touches gearing z_4 with the pitch ellipse of the gearing z_{3b} of the deformed member 3. It follows that big (main) axle of pitch ellipse of gearing z_{3a} at the point A has the size r_{3ae}. It follows from the above as well as from fig. 2 that: $r_{3ae} = r_e + r_2 \quad r_{3ae} = r_{3af}$

where:

r_e - axle eccentricity of the member 2 rotation

r_2 - radius of pitch circle of gearing z_2 of the member 2.

Radius r_{3ae} is smaller than r_4 by a value h (see fig. 1).

Thus: $h = r_4 - r_{3ae}$

Value h usually follows from the body 3 construction based on pre-determined requirements for a transmission. From the vector kinematics for velocity at the point A_2 regarding point O the following is valid:

$$\bar{v}_{A2O} = \bar{v}_{A2E} + \bar{v}_{EO} = \bar{v}_{A3O} \tag{2}$$

From the equation (1) it follows that at the point A the following is valid:

$$\omega_{A2O} = \omega_{A3O} \tag{3}$$

After substitution the velocity vectors at the point A

$$\bar{v}_{A3O} = \omega_{A3O} . r_{3ae}, \quad \bar{v}_{A2E} = \omega_{2E} . r_2, \quad \bar{v}_{EO} = \omega_{EO} . r_e$$

and if we take into consideration the supposed direction of revolution regarding fig. 2 the following is valid:

$$\omega_{A3O} . r_{3ae} = \omega_{2E} . r_2 + \omega_{EO} . r_e \tag{4}$$

Regarding the fact that body 3 is in the part of gearing z_{3a}, z_{3b} flexible, ω_{A3O} it does not always equal the angle velocity of the body 3, thus $\omega_{A3O} \neq \omega_{3O}$. Angle velocity of the non-deformed body 3 equals angle velocity of the input shaft III. With constant $\omega_I = \omega_{EO}$ also ω_{3O} = constant. When deriving the transmission ratio ω_{3O} between shaft I and wheel 2 it is necessary to follow from circumferential velocity $v_{A'3O}$ at point A' on the pitch circle of gearing z_{3a} of the non-deformed member 3. Thus $v_{A'3O} = \omega_{A'3O} r_{3a}$, with $\omega_{A'3O} = \omega_{3O}$.

If we consider that body 3 (flexible member) is braked in the body of transmission then when deriving the transmission ratio between input shaft and wheel 2 we follow form the fact that gear wheel 2 when shaft I with the certain slew angle performs the same mesh trajectory of deformed gear member 3 by gearing z_{3a} as in case of non-deformed member 3 with the other corresponding eccentricity $r_{e'}$, that is smaller than eccentricity r_e by a value of deformation Δr (see fig. 2). Based on the above mentioned, it is possible to write the following for the velocity vector at the point A', which represents the meshing the gear wheel 2 with non-deformed member 3 with the gearing z_{3a}:

$$\bar{v}_{A'2O} = \bar{v}_{A'2E} + \bar{v}_{E''o} = \bar{v}_{A'3O} \tag{5}$$

after substitution: $\omega_{A'3O} . r_{3a} = \omega_{2E} . r_2 + \omega_{E'O} . r_{e'}$ (6)

and the following is valid: $r_{e'} = r_{3a} - r_2$, $\omega_{2E} = \omega_2$, $\omega_{E'O} = \omega_{EO} = \omega_1$

after substitution the following is valid:

$$-\frac{\omega_I}{\omega_2} = \frac{r_2}{r_{3a} - r_2} \tag{6}$$

Expression $\frac{\omega_I}{\omega_2}$ is the searched transmission ratio. Let us denote it by u^3_{I-2}, then we can write:

$$u^3_{I-2} = -\frac{r_2}{r_{3a} - r_2} \text{ or } u^3_{I-2} = \frac{r_2}{r_2 - r_{3a}} \tag{7}$$

where u^3_{I-2} - is transmission ratio between shaft I and wheel 2 when member 3 is braked.

If we substitute $r_{3a} = \frac{m z_{3a}}{2}$ and $r_2 = \frac{m z_2}{2}$, then transmission ratio u^3_{I-2} is as follows:

$$u^3_{I-2} = \frac{z_2}{z_2 - z_{3a}} = \frac{\omega_I}{\omega_2} \tag{8}$$

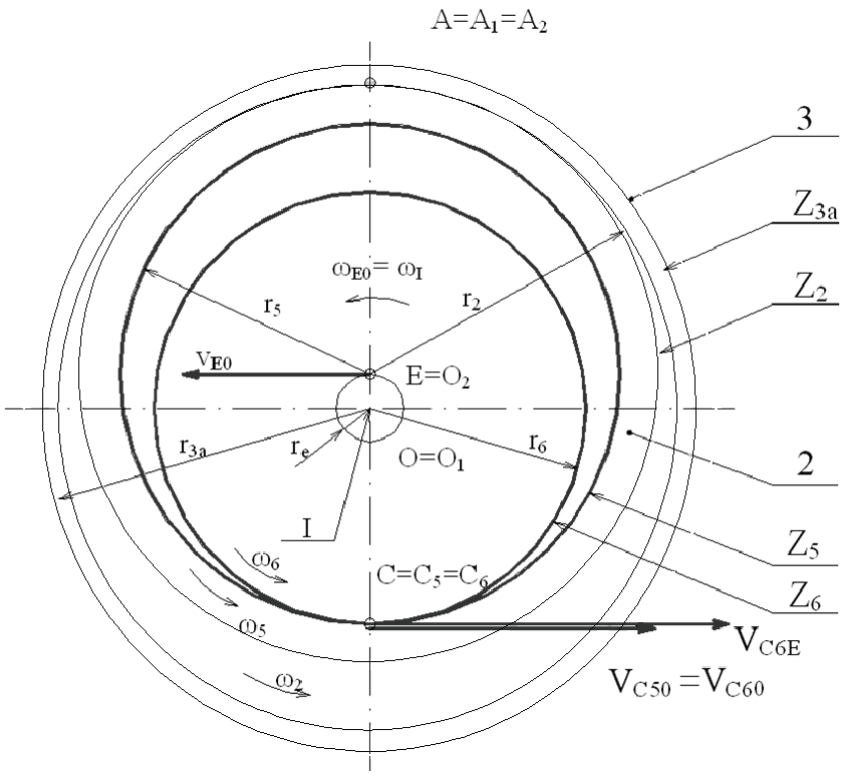

Fig. 3 Kinematic scheme of the second level transmission.
Output shaft with the external gear wheel.

b) Transmission ratio between the shafts I and IV when member 3 is braked. Output shaft V has internal gear wheel. From the equation (6) and (8) for kinematic ratios of gear wheels z_2 and z_3 of the harmonic transmission for angle velocity of the internal gear wheel 2 it follows

$$\omega_2 = \omega_I \frac{r_1 - r_2}{r_2} \tag{9}$$

If annual gears z_2 and z_8 are on the same body of the gear wheel the following is valid: $\omega_2 = \omega_8$. Eccentricity e at the same time equals the radius of revolution of the wheel axis 2 (of the point E) around the point O of the central axis of the transmission.

Thus: $e = r_e = r_6 - r_5 = r_{3a} - r_2$. (10)

From fig. 3 it follows : $\bar{v}_{C6O} = \bar{v}_{6E} + \bar{v}_{EO}$, (11)

At the same time the following is valid:

$v_{C6O} = v_{C5O}$, then $v_{C6O} = r_6\omega_6$, $v_{C6E} = r_3\omega_5$, $v_{EO} = r_e\omega_{EO}$, and $\omega_{EO} = \omega_I$.

After substitution and regarding the selected revolution according to fig. 3 we will obtain:

$$r_6\omega_6 = r_5\omega_5 + r_e\omega_I \tag{12}$$

If $\omega_5 = \omega_2$ (gearings z_5 and z_2 are firmly gripped on the wheel 2) then we can substitute from the equation (9) $\omega_2 = \omega_5$ to the equation (12). From the transmission design it follows that angle velocity of the shaft V equals the angle velocity of the gear wheel z_4, because of the firm connection with the shaft V. Thus $\omega_6 = \omega_V$. After substitution we will obtain:

$$r_6\omega_V = r_5\left(\omega_i \frac{r_2 - r_{3a}}{r_2}\right) + (r_6 - r_5)\omega_I$$

Ratio $\frac{\omega_I}{\omega_V}$ is the transmission ratio between shaft I and V when member 3 is braked. Let us denote it by u^3_{I-V} and angle velocity ω_V by ω^3_V (index 3 – braked member 3, and consequently we will obtain the following: $u^3_{I-V} = \frac{\omega_I}{\omega^3_V} = \frac{r_6 r_2}{r_5(r_2 - r_{3a}) + r_2(r_6 - r_5)}$ (13)

After the radius through teeth number has been defined:

$$u^3_{I-V} = \frac{\omega_I}{\omega^3_V} = \frac{z_6 z_2}{z_5(z_2 - z_{3a}) + z_2(z_6 - z_5)} \tag{14}$$

Transmission ratios between the shaft I and II with the corresponding numbers of teeth for gearing are of the analogical form.

c) Transmission ratio between the shaft I and IV when member 3 is braked. For this transmission, analogical relationship known form harmonic transmissions can be derived. Thus, the following is valid:

$$u_{I-IV}^{3} = \frac{z_4}{z_4 - z_{3b}} \tag{15}$$

3.2 Transmission ratios when member 4 is braked and n_4 =0.

a) Transmission ratio between the shaft I and III. For the transmission ratio the following relationship can be derived:

$$u_{I-III}^{4} = \frac{\omega_I}{\omega_{III}^{4}} = \frac{z_{3b}}{z_{3b} - z_4} \tag{16}$$

where ω_{III}^{4} - is the angle velocity of the shaft III when member4 is braked.

b) Transmission ratio between the shaft I and V. For the angle velocity of the shaft V the following is valid:

$$\omega_V^{4} = \omega_V^{3} + \omega_{III}^{4} \tag{17}$$

where

ω_V^{4} - is the angle velocity of the shaft V when member 4 is braked

ω_V^{3} - is the angle velocity of the shaft V when member 3 is braked

Let us denote transmission ratio between the shaft I and V when member 4 is braked by u_{I-V}^{4}, then

$$u_{I-V}^{4} = \frac{\omega_I}{\omega_V^{4}} = \frac{\omega_I}{\omega_V^{3} + \omega_{III}^{4}} \tag{18}$$

After expression ω_V^{3} from the equation (14) and ω_{III}^{4} from the equation (16) and after substitution to the equation (18) we will obtain:

$$u_{I-V}^{4} = \frac{z_6 z_2 z_{3b}}{\left[z_5\left(z_2 - z_{3a}\right) + z_2\left(z_6 - z_5\right)\right] z_{3b} + \left(z_{3b} - z_4\right) z_6 z_2}$$

Relationship for transmission ratio u_{I-II}^{4} between the shafts I and II when member 4 is braked is of the analogical form, although when the corresponding number of teeth of the gearing are substituted.

4. TRANSMISSION RATIOS FOR THE SECOND ALTERNATIVE – SHAFT II IS THE DRIVESHAFT

4.1 If the wheel 4 is braked and n_4 = 0.

a) Transmission ratio between the shafts II and I: $u_{II-I}^{4} = \dfrac{1}{u_{I-II}^{4}}$

b) Transmission ratio between the shafts II and III: $u_{II-III}^{4} = \dfrac{u_{I-III}^{4}}{u_{I-II}^{4}}$

c) Transmission ratio between the shafts II and V: $u^{4}_{II-V} = \dfrac{u^{4}_{I-V}}{u^{4}_{I-II}}$

4.2 Transmission ratios when member 3 is braked and $n_3 = 0$

a) Transmission ratio between the shafts II and I: $u^{3}_{II-I} = \dfrac{1}{u^{3}_{I-II}}$

b) Transmission ratio between the shafts II and IV: $u^{3}_{II-IV} = \dfrac{u^{3}_{I-IV}}{u^{3}_{I-II}}$

c) Transmission ratio between the shafts II and V: $u^{3}_{II-V} = \dfrac{u^{3}_{I-V}}{u^{3}_{I-II}}$

5. CONCLUSION

The objective of the paper is to present principally new design of multiple output both side transmission with the possibility of input and output interchange with the alternatives of the possible three outputs from the given transmission mechanism. Based on the kinematic scheme, corresponding transmission ratios have been derived. Within the further research, force ratios analysis and possible loadings of the mentioned mechanism, eventually the other corresponding solutions [1], [4], [9] will be given great attention. This contribution forms a part of the solution of the grant task VEGA 1/4156/07 and KEGA 3/6279/08.

6. REFERENCES

[1] GREGA, R. – KRAJŇÁK, J. – JURČO, M.: Prezentácia vlastností pneumatických spojok novej typovej rady. In: *Acta Mechanica Slovaca. Roč. 8, č. 3 Optimalizácia mechanických sústav,* 2004, s. 47-52.

[2] HAĽKO, J. – KLIMO, V.: Dvojstupňový viacvýstupový prevod. In: *Sborník 45. mezinárodní konference kateder částí a mechanismů strojů: 7. – 9. září 2004, Blansko,* Česká republika, Brno: VUT, 2004, 6 s., ISBN 80-214-2702-7

[3] HOMIŠIN, J. et al.: *Základy strojného inžinierstva*. Košice: TU-SjF, 2001, 253 s., ISBN 80-7099-661-7.

[4] KARDOŠ, F. et al.: Investigation of Gaseous Medium State Change in Pneumatic Element of Flexible Shaft Coupling. In: *Pneumatyka*, vol. 62, no. 1, 2007, p. 34-36, ISSN 1426-6644

[5] KLIMO, V. – MANTIČ, M.: Some Problems on Micromechanism′s Actuators. In: *Acta Mechanica Slovaca*., roč. 8, č. 1, 2004, s. 69-74.

[6] MIŠÍK, L. et al.: Side Milling Factors Analysis Affecting the Surface Irregularities of High-grade steel E295. In: *Technical Gazette*, vol. 15, no. 2, 2008, p. 19-23, ISBN 1330-3651

[7] PAŠKO, J. – PAVLENKO, S. – KISLÍKOVÁ, I.: *Pružnosť a pevnosť 2: Teória a príklady.* Prešov: Fakulta výrobných technológií TU v Košiciach so sídlom v Prešove, 2003, 154 s., ISBN 80-7099-983-7

[8] TOMAGOVÁ, M. – VOJTKOVÁ, J. – MEDVECKÁ-BEŇOVÁ, S. – HARACHOVÁ, D. – MANTIČ, M.: *Základy strojníctva. Učebné texty a praktiká.* Košice: SjF TU v Košiciach, 2007, ISBN 978-80-8073-916-4

[9] VOJTKO, I. – MATIJA, R.: Meranie a zhodnocovanie vibrácií. In: *Nové smery vo výrobných technológiách 2006: 8. medzinárodná vedecká konferencia, Prešov, 22. – 23. 6. 2006: Zborník referátov,* Košice: FVT TU, 2006, s. 503 – 508, ISBN 80-8073-554-9

[10] Firemná literatúra fa. The MathWorks Inc. – MATLAB, Simulink, Simscape