NEW ARC WELDING ROBOT GENERATION

NOVA GENERACIJA ROBOTA ZA ELEKTROLUČNO ZAVARIVANJE

Ralf WEBER, **Jacek IGNASIAK** [1)]

Ključne riječi: robot sa prolaznom okretnom rukom, nova generacija, brzina, zavarivanje, gorionik

Key words: Hollow wrist robot, new generation, speed, arc welding, torch

Sažetak: Nova generacija robota nazvana "robot sa prolaznom okretnom rukom" postaje jako popularna u svojoj primjeni. Uspoređujući ih sa starom generacijom robota (Upravljački kabel sa stražnje strane robota), nove generacije robota imaju mnoge prednosti. Generaciju robota sa prolaznom okretnom rukom razvili su ABB, FANUC, KUKA, MOTOMAN, OTC, PANASONIC i drugi. Binzel grupa razvila je odgovarajuće gorionike i tehnologiju i imaju vrlo zapažene aplikacije diljem svijeta.

Abstract: Hollow wrist robot is becoming main popular robots for robotics. Compared with old generation robots (Cable assembly on the back of robots), new generation robots have many advantages. Hollow wrist robots have been developed by ABB, FANUC, KUKA, MOTOMAN, OTC, PANASONIC etc. Binzel group researched corresponding torches and technology and have very successful application in the world.

[1)] Alexander Binzel Schweisstechnik GmbH and Co. KG
weber@binzel-abicor.com, ignasiak@binzel-abicor.com.pl

1. INTRODUCTION

New generation arc welding robots system with good accessibility and high lifetime are applied widely in automotive industry. This hollow wrist arc welding robots is becoming mainstream robots. And moving speed of robots is faster and faster.

2. HOLLOW WRIST ARC WELDING ROBOTS AND TORCHES

2.1 Abb robot: irb 1600id

- Integrated welding cable
- Specification
  - Handling capacity 4 kg
  - Reach 1.5 m
  - Wight 250 kg
  - Mounting floor, and inverted, tilted +/- 30°of robot base
- Protection IP40
- Repeatability
  - Positions repeatability 0.05 mm
  - Path repeatability 0.25 mm

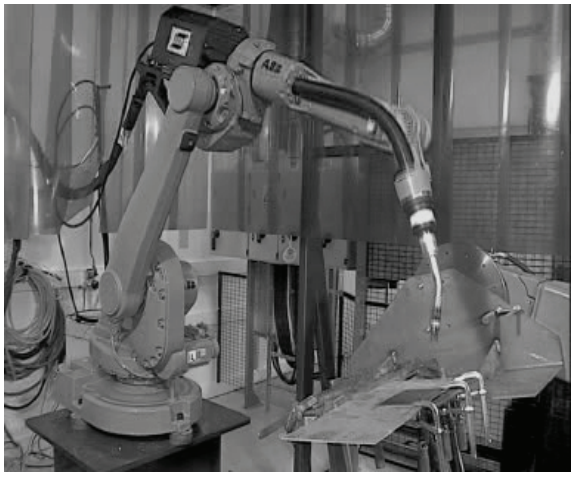

Figure 1. IRB 1600ID with integrated welding cable

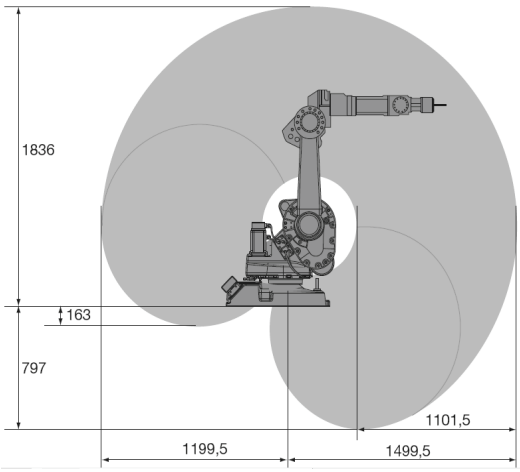

Figure 2. IRB 1600ID working range

Table 1. Max. speed of ABB robots

IRB1600ID IRB1600		°/sec	
Max. speed	J1	180	150
	J2	180	160
	J3	180	170
	J4	320	320
	J5	380	400
	J6	460	460
	Total	1700	1660

- Binzel torch mount-ABIROB A500/W500 iSTM for ABB IRB1600ID

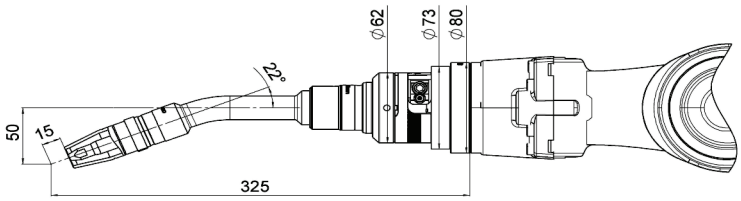

Figure 3. ABIROB A500 iSTM

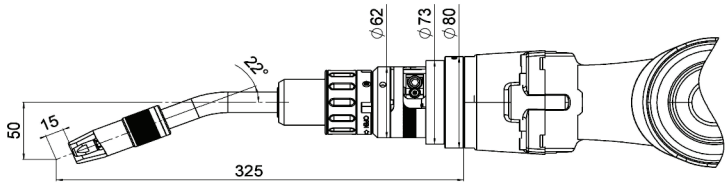

Figure 4. ABIROB W500 iSTM

2.2 Fanuc robot: arc mate 100ic

- Integrated welding cable
- Specification
  - Handling capacity 6-10 kg
  - Reach 1.42 m
  - Wight 130 kg
- Repeatability
  - Positions repeatability 0.08 mm

Figure 5. ARC MATE 100IC with integrated welding cable

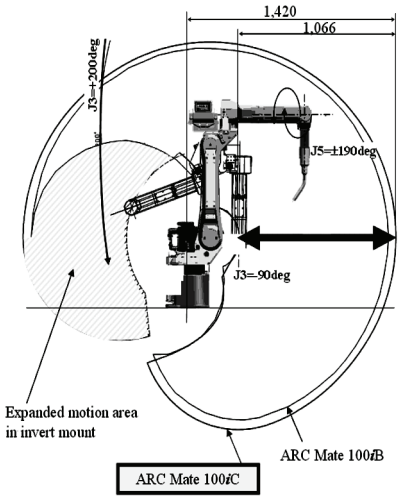

Figure 6. IRB 1600ID working range

- Increase Max. axis speed by 11 % on average of all axes over the current model (Max. 40 %)

Table 2. Max. speed of FANUC robots

ARC Mate 100ic ARC Mate 100ib		°/sec	
Max. speed	J1	210	150
	J2	190	160
	J3	210	170
	J4	400	400
	J5	400	400
	J6	600	520
	Total	2010	1800

- Increase productivity more than 15 % through increased acceleration performance

Table 3. Comparison on productivity

ARC Mate 100ic ARC Mate 100ib	sec	
Staggered intermittent welding	11.65	13.71
Tack welding	6.94	8.07

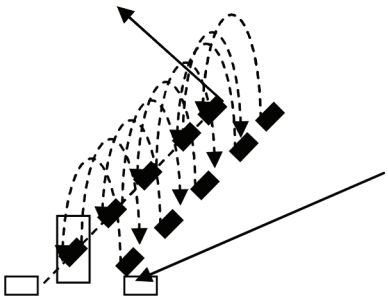

Figure 7. Staggered intermittent welding

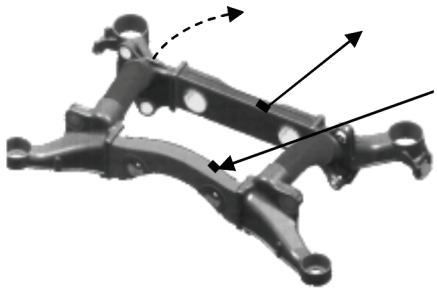

Figure 8.Tack welding

- Binzel torch mount-ABIROB A500/W500 iSTM for FANUC ARC Mate 100ic

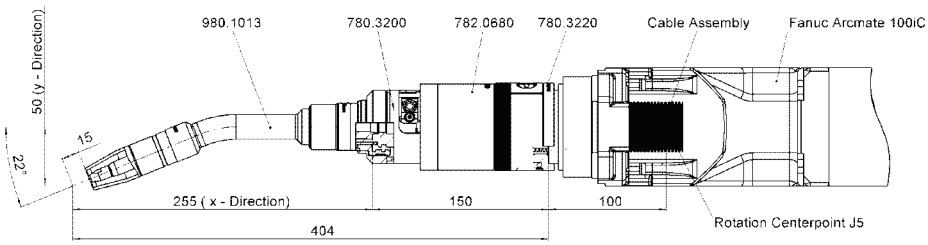

Figure 9. Air-cooled Package iSTM-ABIROB A500

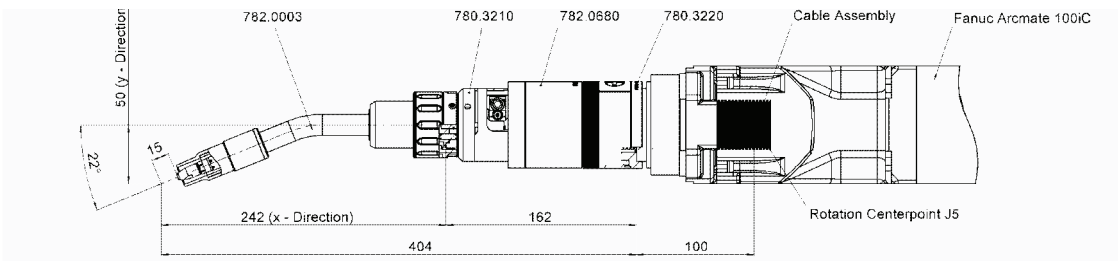

Figure 10. Water-cooled Package iSTM-ABIROB W500

2.3 Kuka robot: KR5ARC HW

Figure 11. KR5ARC HW Figure

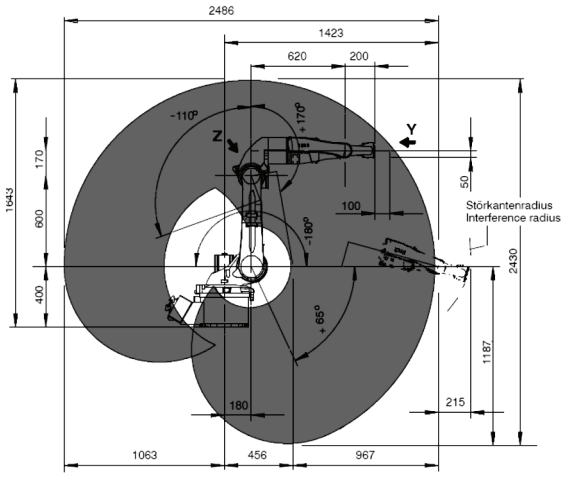

12.KR5ARC HW working range

- Max. speed (KUKA robot):

Table 4. Max. speed of KUKA robots

KR5ARC HW KR5ARC		°/sec	
Max. speed	J1	156	154
	J2	156	154
	J3	227	228
	J4	390	343
	J5	390	384
	J6	858	721
	Total	2177	1984

2.4 Otc robot: AX-V4

Figure 13. AX-V4

2.5 Motoman robot: SSA2000 (EA1400N)

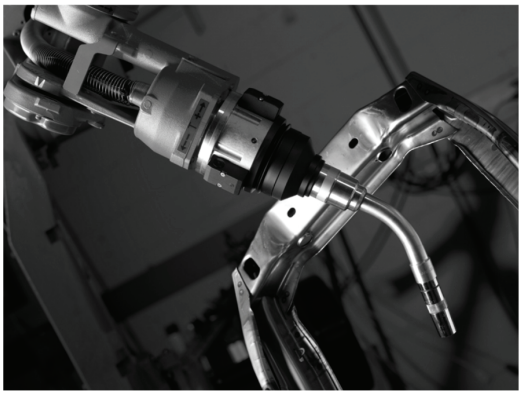

Figure 14. Motoman SSA2000 with ABIROB A360 iCAT

Figure 15. Motoman SSA2000

2.6 Panasonic robot: tawers ® TB1400WG

Figure 16. Tawer TB1400WG Figure

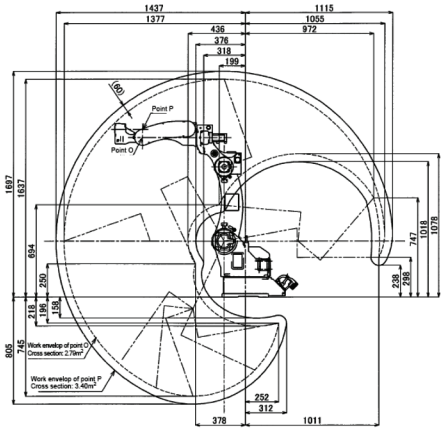

Figure 17. TB1400WG working range

2.7 Torch and torch mount technology and torches data

2.7.1 iSTM torch without anti-collision

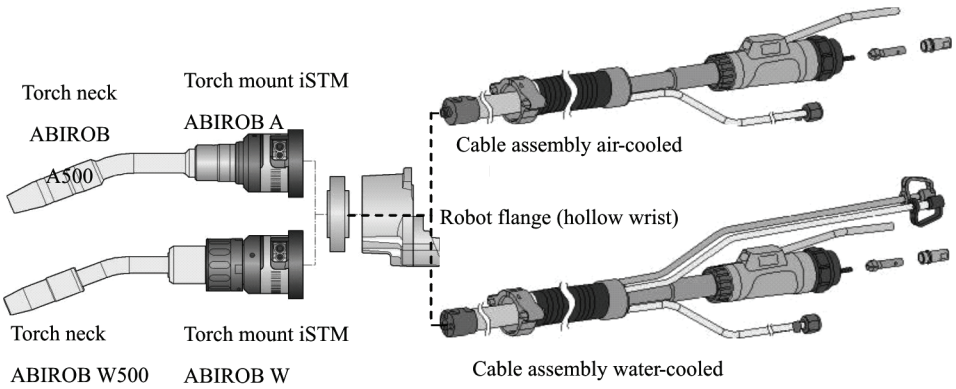

Figure 18. Exchangeable torch neck of iSTM and high lifetime cable assembly

Figure 19. Disassembly iSTM torch

2.7.2 iCAT torch with anti-collision

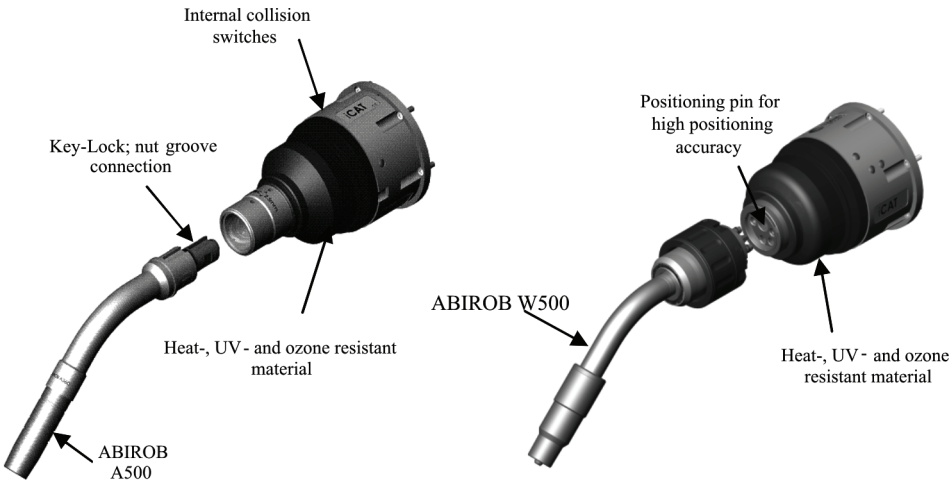

Figure 20. Exchangeable torch neck iCAT

2.7.3 Torch technology data-tcp dimension

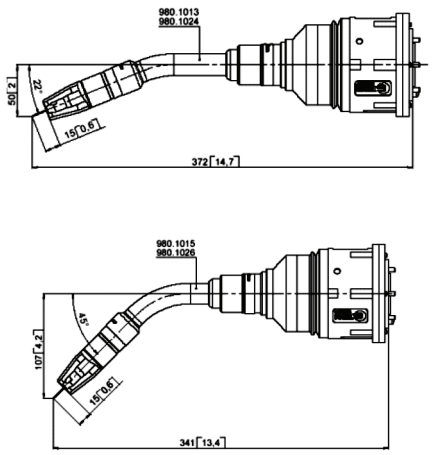

Figure 21. iCAT – ABIROB A

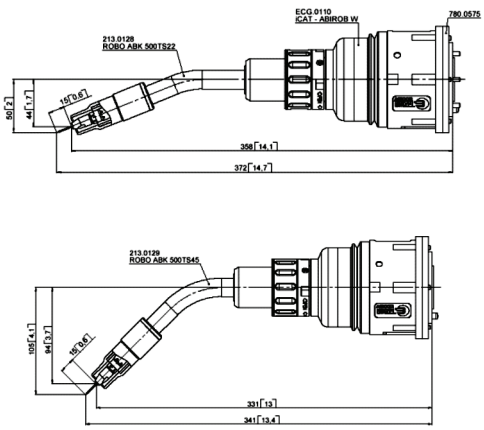

Figure 22 .iCAT – ABIROB W

2.7.4 Torch technology data-connectors

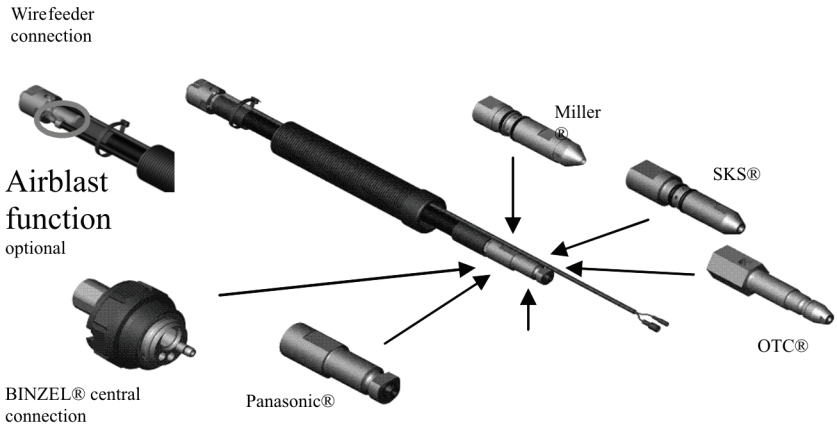

Figure 23. Binzel iCAT for all standard wire feeders

Table 5. Torch rating and duty cycle

iSTM/iCAT	Cooling	Gas	Duty Cycle	Rating	Wire -Ø
ABIROB A300	air	CO_2	100 %	300 A	0,8 - 1,4 mm
ABIROB A360	air	CO_2	100 %	360 A	0,8 - 1,4 mm
ABIROB A500	air	CO_2	100 %	420 A	0,8 - 1,6 mm
ABIROB A300	air	Mixed 82/18	100 %	250 A	0,8 - 1,4 mm
ABIROB A360	air	Mixed 82/18	100 %	290 A	0,8 - 1,4 mm
ABIROB A500	air	Mixed 82/18	100 %	370 A	0,8 - 1,6 mm
ABIROB 350 GC	air	CO_2	100 %	350 A	0,8 - 1,2 mm
ABIROB 350 GC	air	Mixed 82/18	100 %	300 A	0,8 - 1,2 mm
ABIROB W500	water	CO_2	100 %	450 A	0,8 - 1,6 mm
ABIROB W500	water	Mixed 82/18	100 %	400 A	0,8 - 1,6 mm
Technical data according to EN 60 974-7:					

3. CONCLUSIONS

Hollow wrist arc welding robots have been main popular robots with very successful application in the world. In conjunction with the welding equipment designed specifically for this type of arc welding robots creates welding applications allowing for optimum use of their advantages. iSTM and iCAT by their rugged and slim design gives high flexibility and optimal work piece accessibility. Now it gives very wide range of opportunities for arc welding applications designers.

4. ACKNOWLEDGEMENT

This research was supported by Mr.Ingo Frischkorn and Mr.Weber Ralf from Alexander Binzel Corporation, Germany.

5. REFERENCES

[1] Weber Ralf (2007), Order overview Icat
[2] Weber Ralf (2008), Sixth Asian Pacific IIW International Congress

Alexander Binzel Schweisstechnik
GmbH & Co. KG

Postfach 10 01 53 · D-35331 Gießen

Tel.: ++49 (0) 64 08 / 59–0 Fax: ++49 (0) 64 08 / 59-141 www.binzel-abicor.com

New Arc Welding Robot Generation

Dr.-Ing. habil. E. Schubert, Dipl. Ing. Ingo Frischkorn,
Dipl.-Ing. Ralf Weber

Alexander Binzel Schweisstechnik GmbH & Co. KG, Buseck

„World wide. With more than 30 Produktion- and Salesunits and more than 20 exclusive partners...“

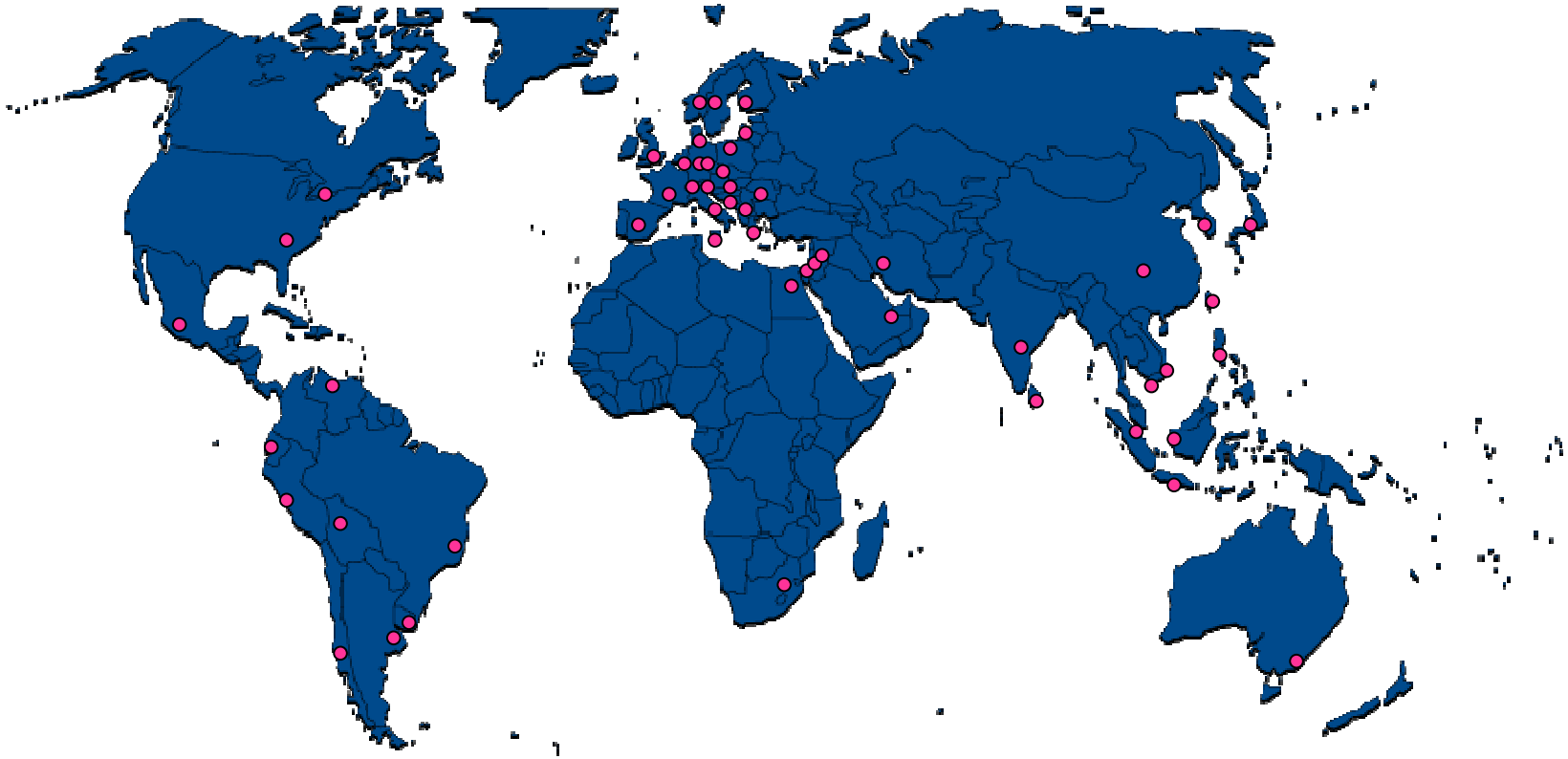

Hollow wrist robots

Abstract

Hollow wrist robot is becoming main popular robots for welding applications. Compared with the old generation of robots (Cable assembly on the back of the robots), the new generation of this robots have many advantages. Hollow wrist robots have been developed by ABB, FANUC, KUKA, MOTOMAN, OTC, PANASONIC etc.

ABICOR Binzel group researched corresponding torches and technology and have with more than 3000 sold systems for this new robot styles very successful applications in the world.

New generation arc welding robots system with good accessibility and high lifetime are applied widely in automotive industry and T1/T2 industry.

Hollow wrist robots

Advantages

The biggest advantages for the end users are following topics:

- Faster movement
- Longer live time of the cable assembly
- Soft and smooth movements during the welding as there are no problems with collision of the cable assembly
- Easier to use with offline programming

Hollow wrist robots

Robot concepts

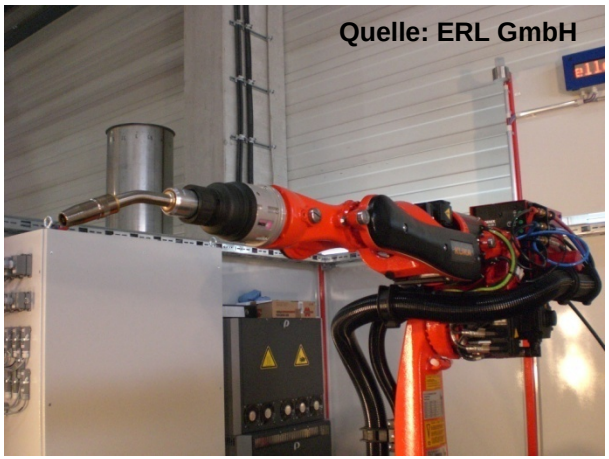

Quelle: ABICOR Binzel

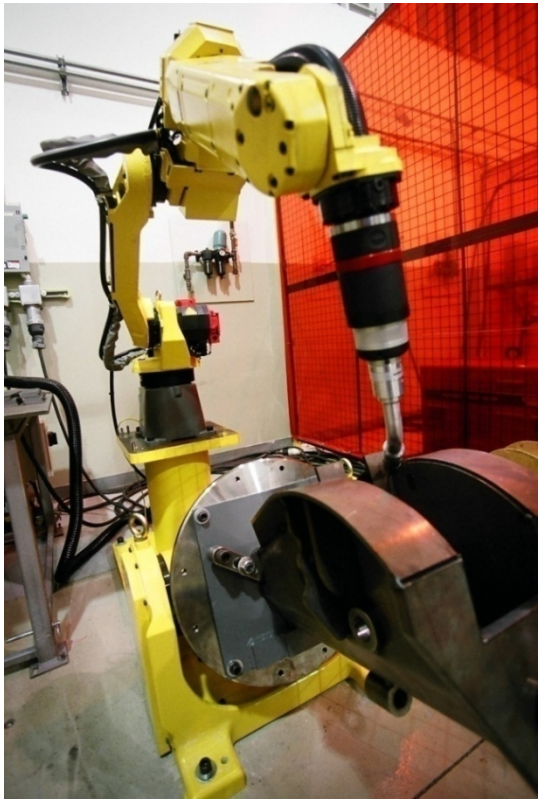

Hollow wrist robots

Equipment – iSTM air- and water-cooled

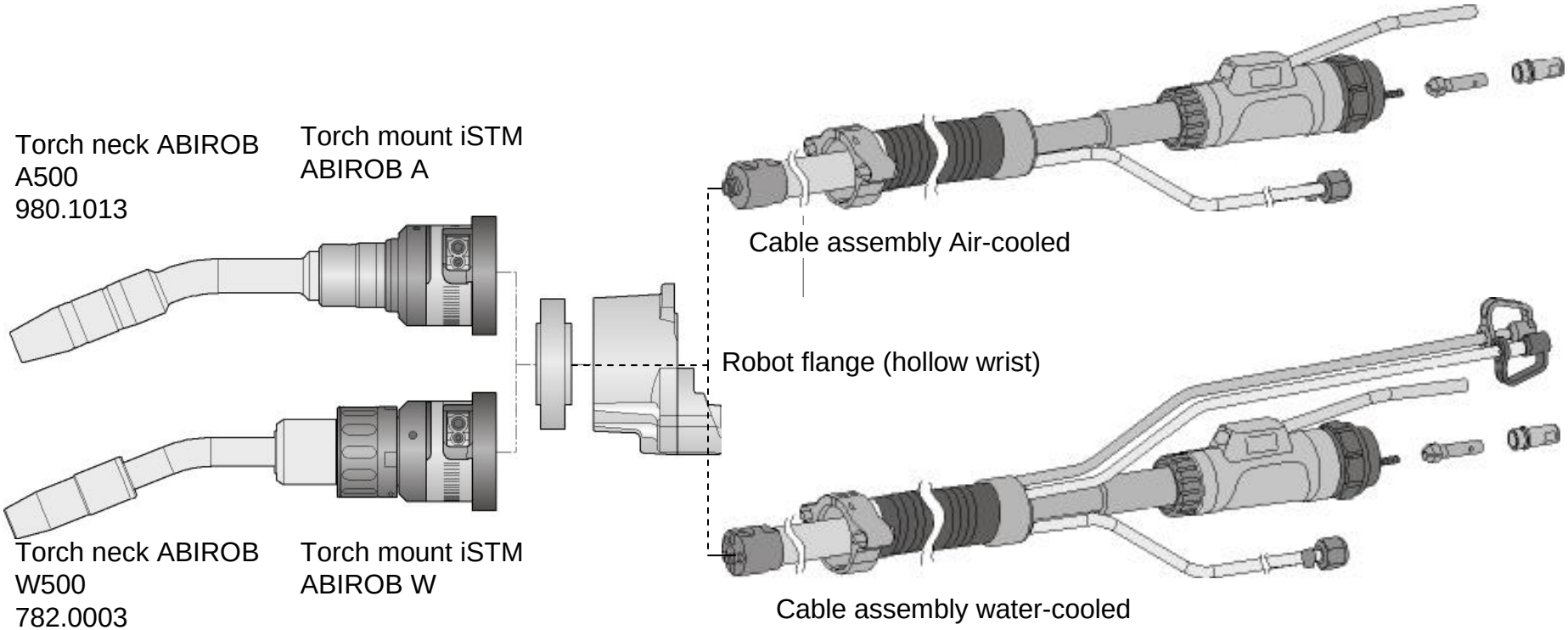

Hollow wrist robots

Equipment – iCAT air- and water-cooled

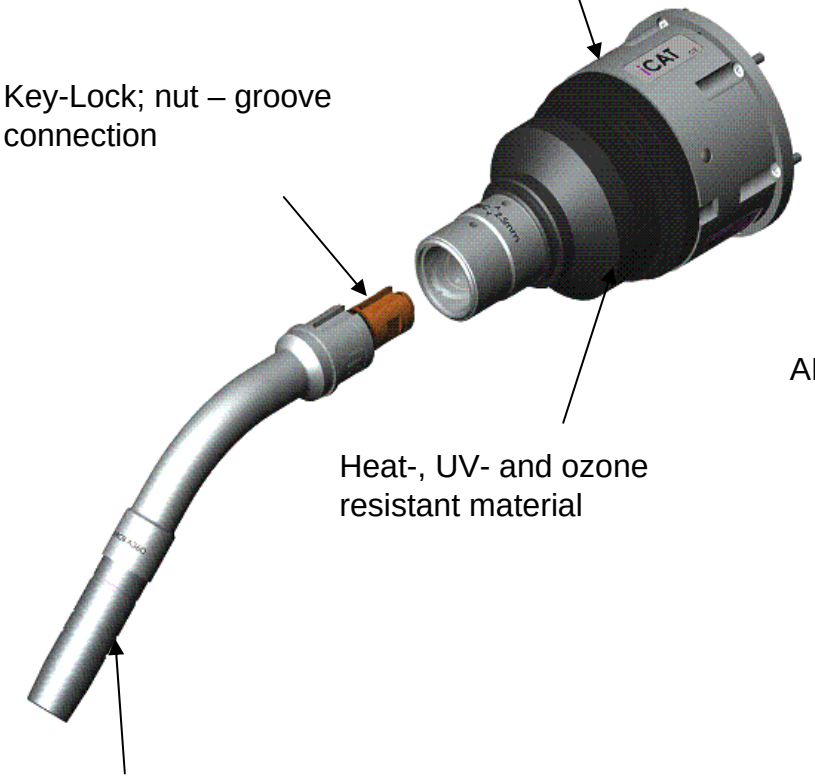

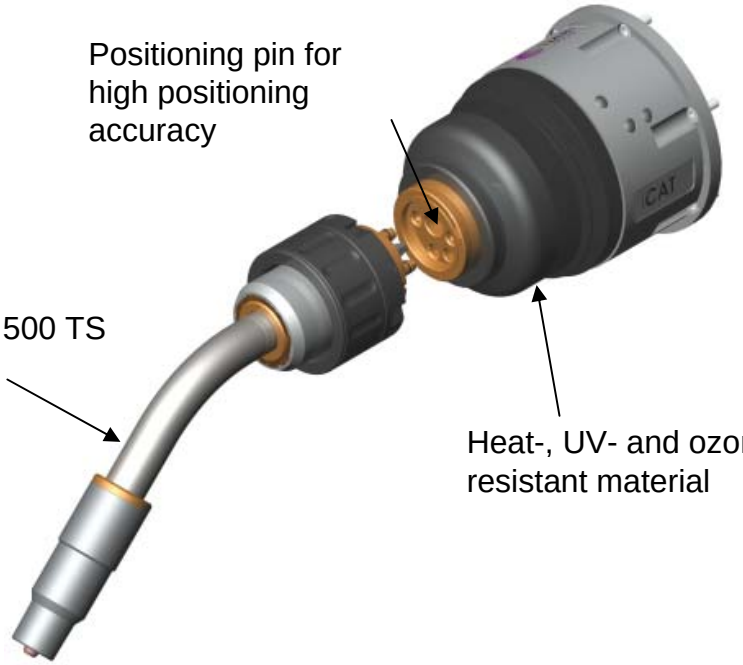

Hollow wrist robots

Equipment – iCAT air- and water-cooled

iCAT – ABIROB A

iCAT – ABIROB W

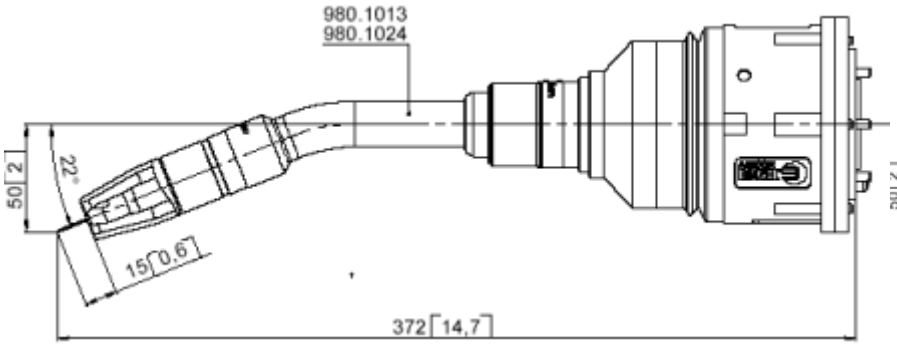

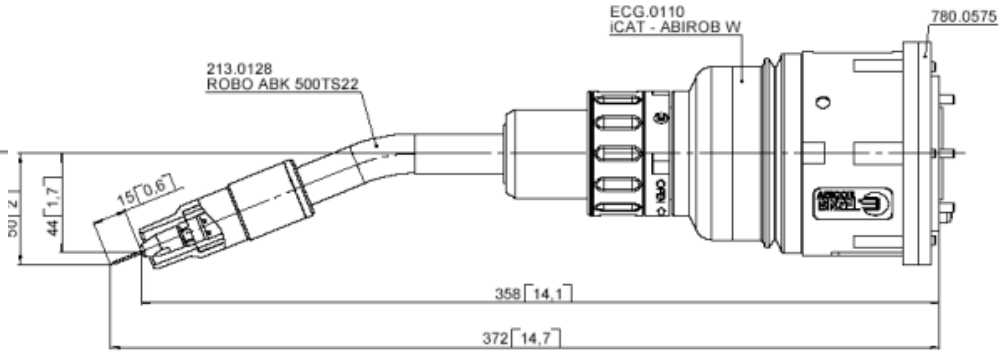

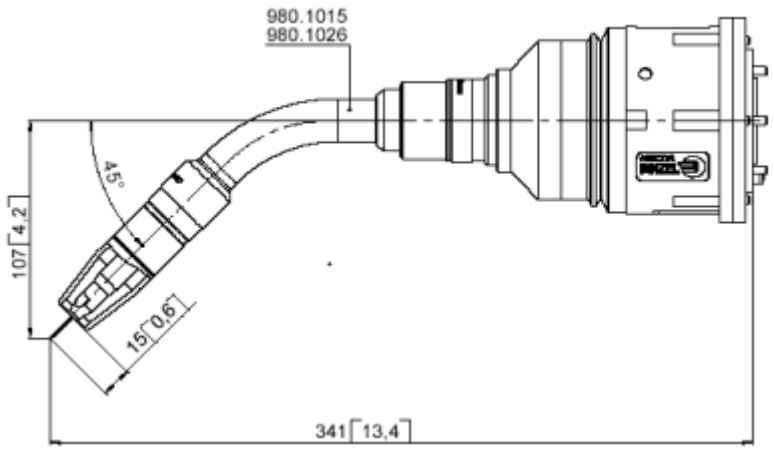

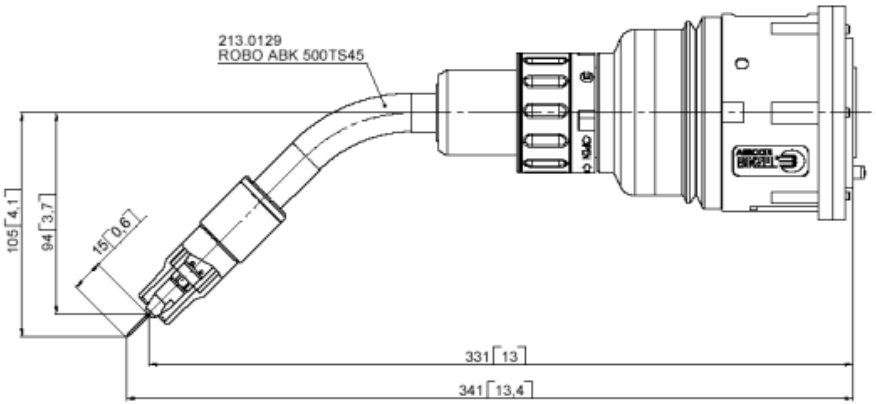

Hollow wrist robots

iCAT and iSTM – Wire feeder connectors

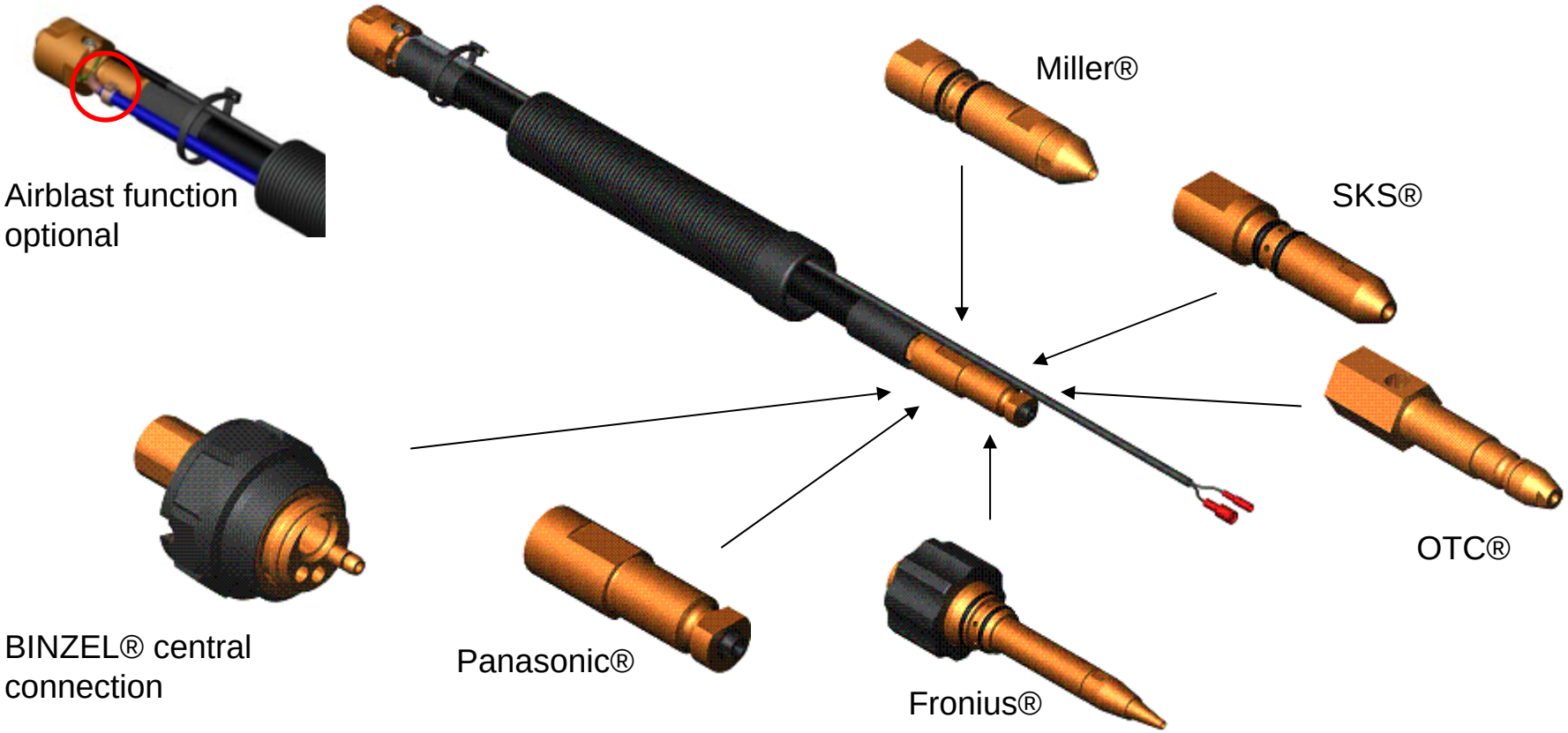

Hollow wrist robots

iCAT and iSTM – Torch neck ratings

Technical data according to EN 60 974-7:

iSTM/iCAT	Cooling	Gas	Duty Cycle Rating		Wire-Ø
ABIROB A300	air	CO_2	100%	300 A	0,8 - 1,4 mm
ABIROB A360	air	CO_2	100%	360 A	0,8 - 1,4 mm
ABIROB A500	air	CO_2	100%	420 A	0,8 - 1,6 mm
ABIROB A300	air	Mixed 82/18	100%	250 A	0,8 - 1,4 mm
ABIROB A360	air	Mixed 82/18	100%	290 A	0,8 - 1,4 mm
ABIROB A500	air	Mixed 82/18	100%	370 A	0,8 - 1,6 mm
ABIROB 350 GC	air	CO_2	100%	350 A	0,8 - 1,2 mm
ABIROB 350 GC	air	Mixed 82/18	100%	300 A	0,8 - 1,2 mm
ABIROB W500	water	CO_2	100%	450 A	0,8 - 1,6 mm
ABIROB W500	water	Mixed 82/18	100%	400 A	0,8 - 1,6 mm

Hollow wrist robots

Cable movements

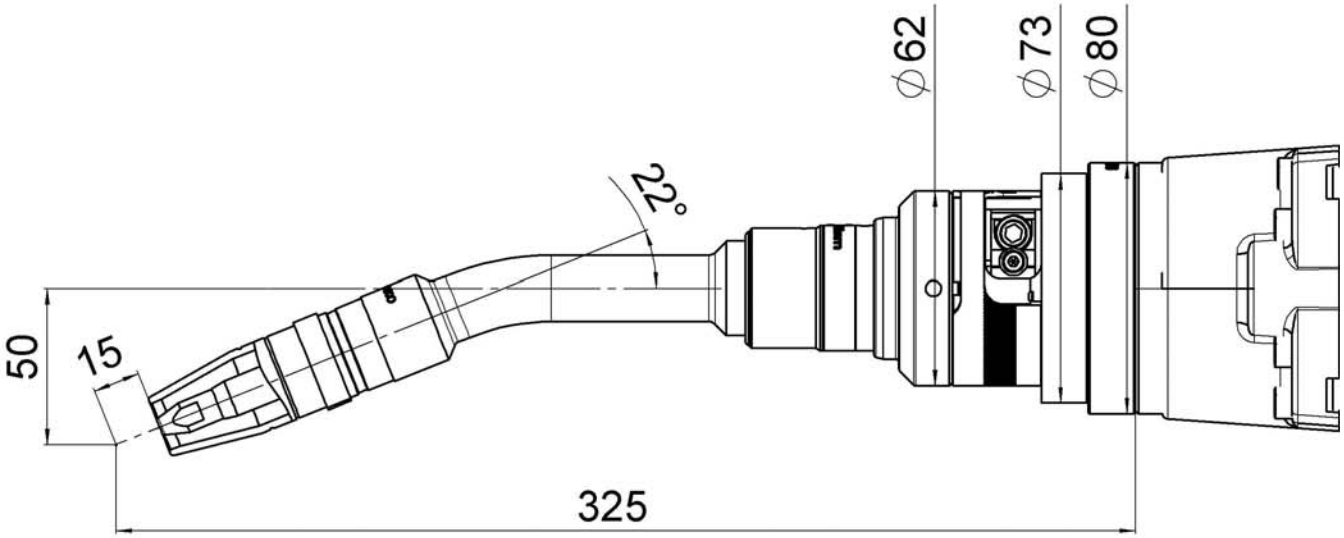

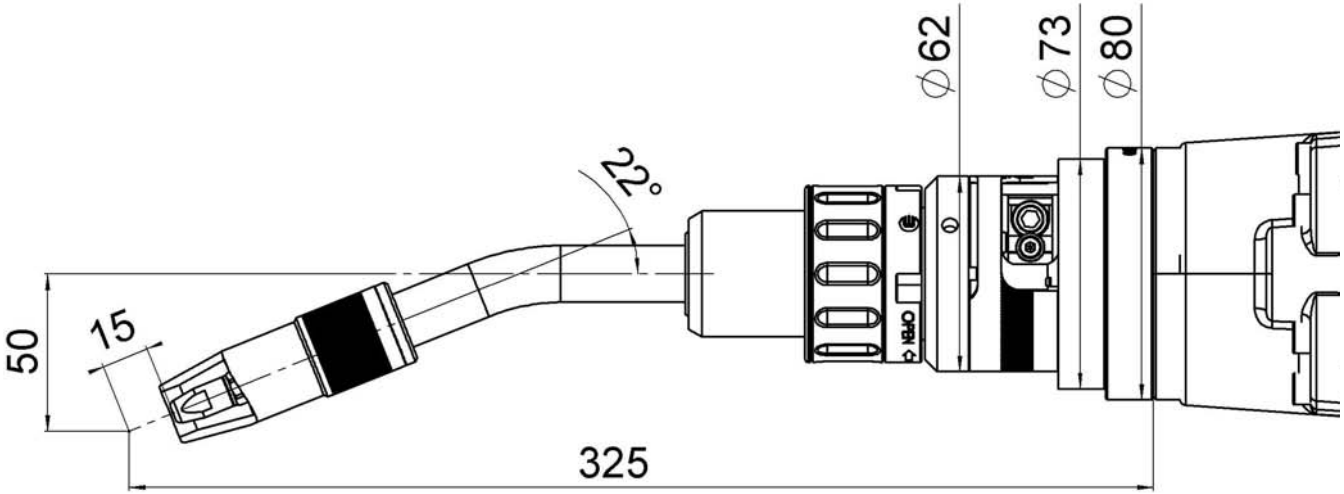

Quelle: ABB Schweden

Hollow wrist robots

Speed improvement

- **Increase Max. axis speed on average of all axes over the current model**

		ARC Mate 100*i*C	ARC Mate 100*i*B
Max. speed	J1	210 °/sec	150 °/sec
	J2	190 °/sec	160 °/sec
	J3	210 °/sec	170 °/sec
	J4	400 °/sec	400 °/sec
	J5	400 °/sec	400 °/sec
	J6	600 °/sec	520 °/sec
	Total	2010 °/sec	1800 °/sec

- **Increase productivity more than 15% through increased acceleration performance**

	ARC Mate 100*i*C	ARC Mate 100*i*B
Staggered intermittent welding	11.65sec	13.71sec
Tack welding	6.94sec	8.07sec

Staggered intermittent welding

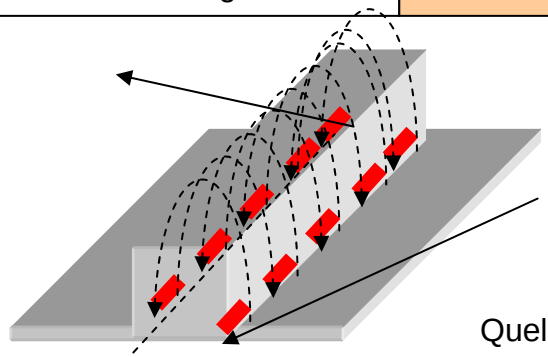

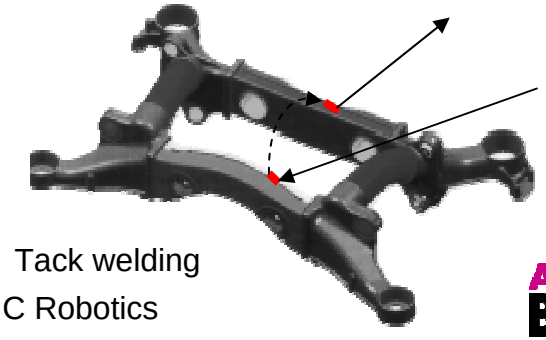

Tack welding

Quelle: FANUC Robotics

Hollow wrist robots

ABB® IRB 1600 ID

- Integrated welding cable
- Specification
  - Handling Capacity 4 kg
  - Reach 1.5 m
  - Weight 250 kg
  - Mounting Floor, and inverted, tilted +/- 30° of robot base
- Protection IP40
- Repeatability
  - Positions repeatability 0,05 mm
  - Path repeatability 0,25 mm

Quelle: ABB Friedberg

Hollow wrist robots

ABB® IRB 1600 ID

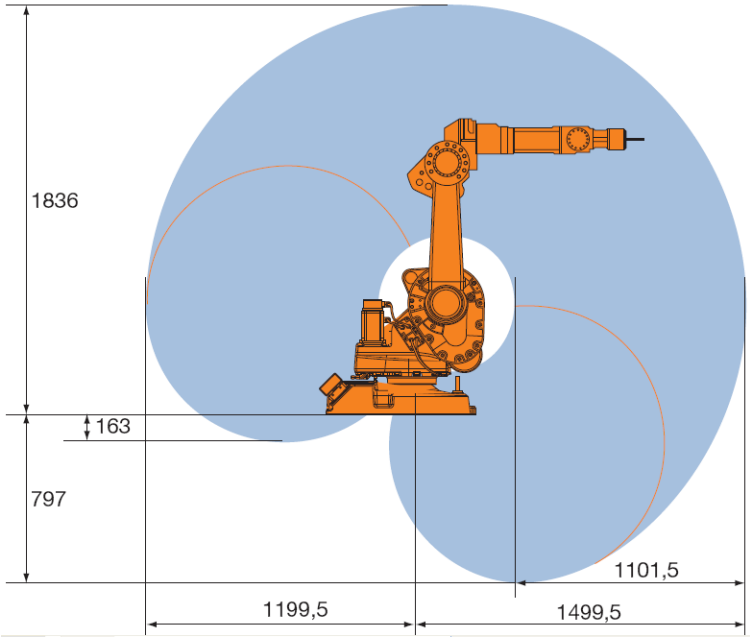

Quelle: ABB Friedberg

		IRB 1600ID	IRB 1600
Max. speed	J1	180 °/sec	150 °/sec
	J2	180 °/sec	160 °/sec
	J3	180 °/sec	170 °/sec
	J4	320 °/sec	320 °/sec
	J5	380 °/sec	400 °/sec
	J6	460 °/sec	460 °/sec
	Total	2010 °/sec	1660 °/sec

Hollow wrist robots

ABB® IRB 1600 ID

AIR-COOLED Package iSTM-ABIROB A

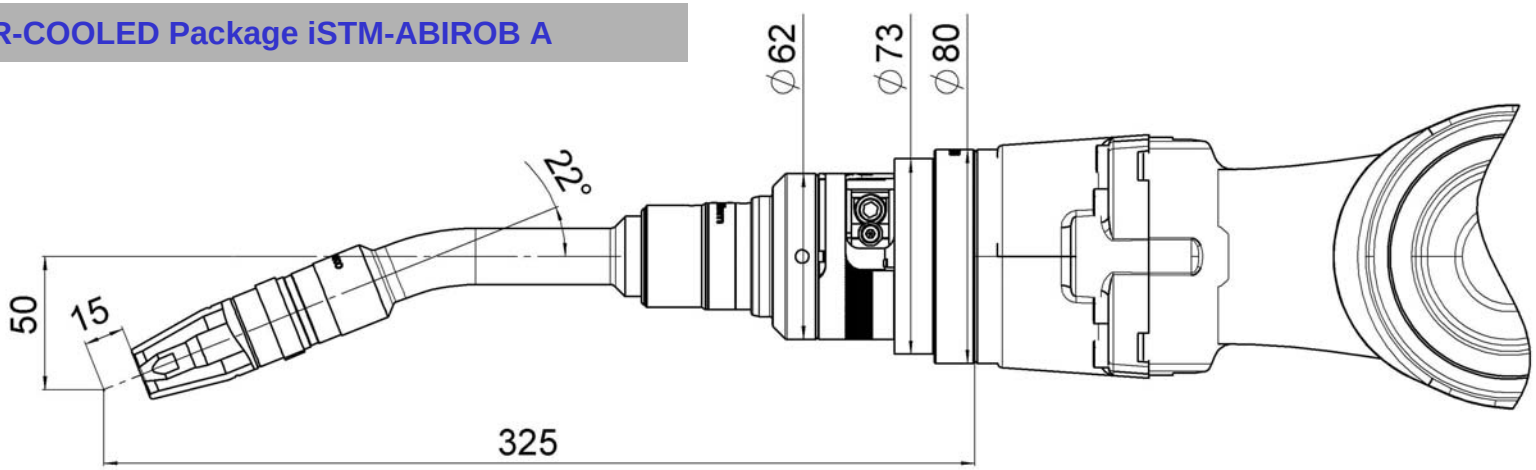

WATER-COOLED Package iSTM-ABIROB W

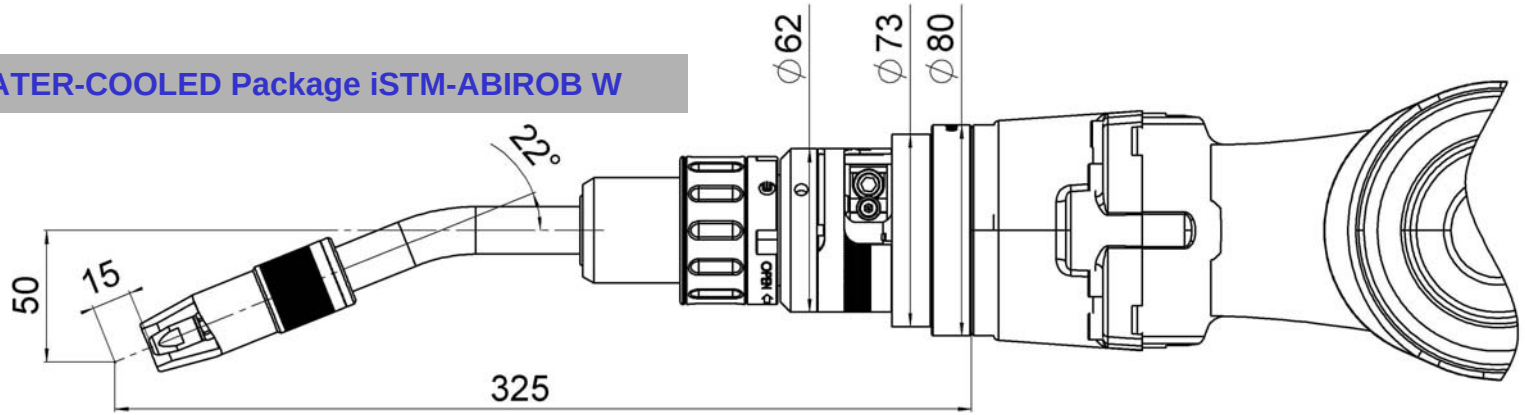

Hollow wrist robots

FANUC® ArcMate 100iC/100iC-6L/120iC/120iC-10L

- Integrated welding cable
- Specification
  - Handling Capacity 6-10 kg
  - Reach 1.42 m
  - Weight 130 kg
- Repeatability
  - Positions repeatability 0,08 mm

Quelle: FANUC Neuhausen

Hollow wrist robots

FANUC® ArcMate 100iC/100iC-6L/120iC/120iC-10L

Slim Arm

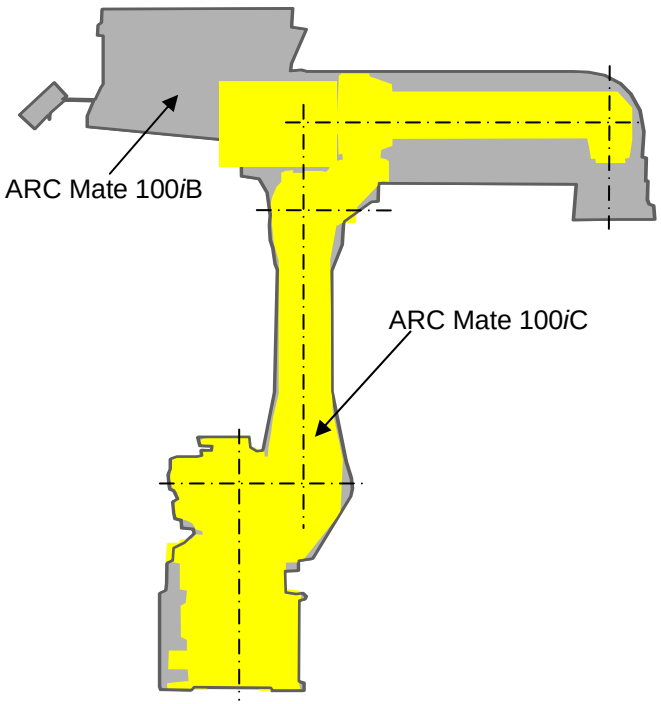

Wide work envelope

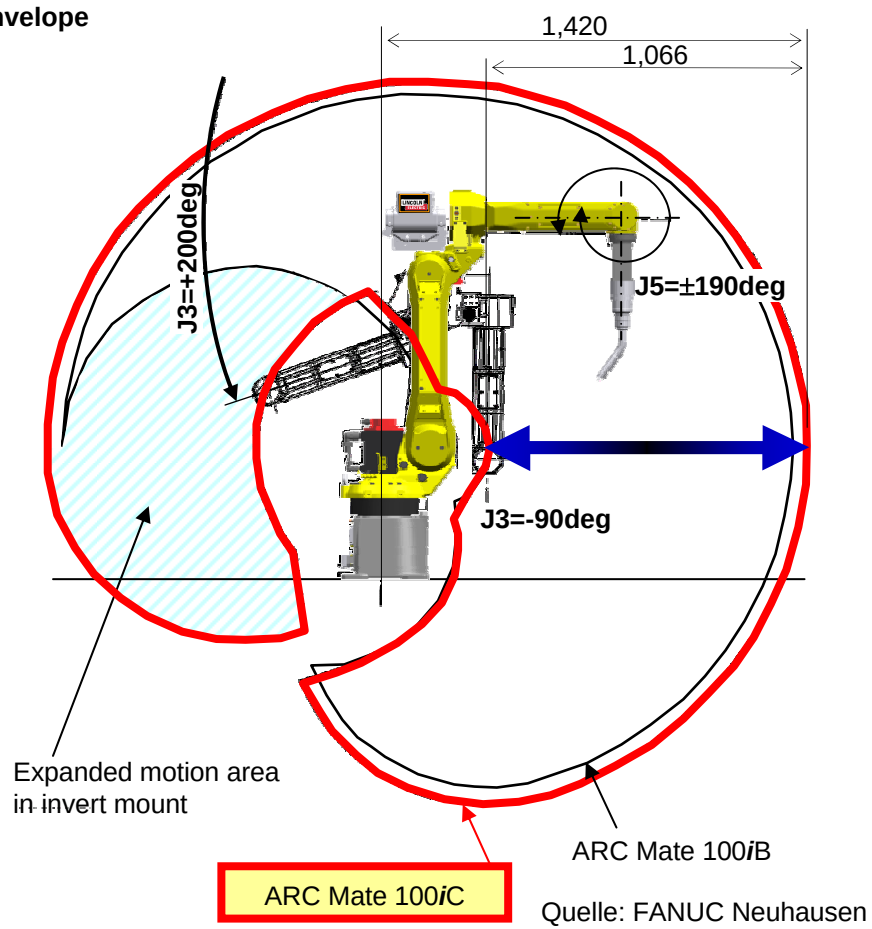

Quelle: FANUC Neuhausen

Hollow wrist robots

FANUC® ArcMate 100iC/100iC-6L/120iC/120iC-10L

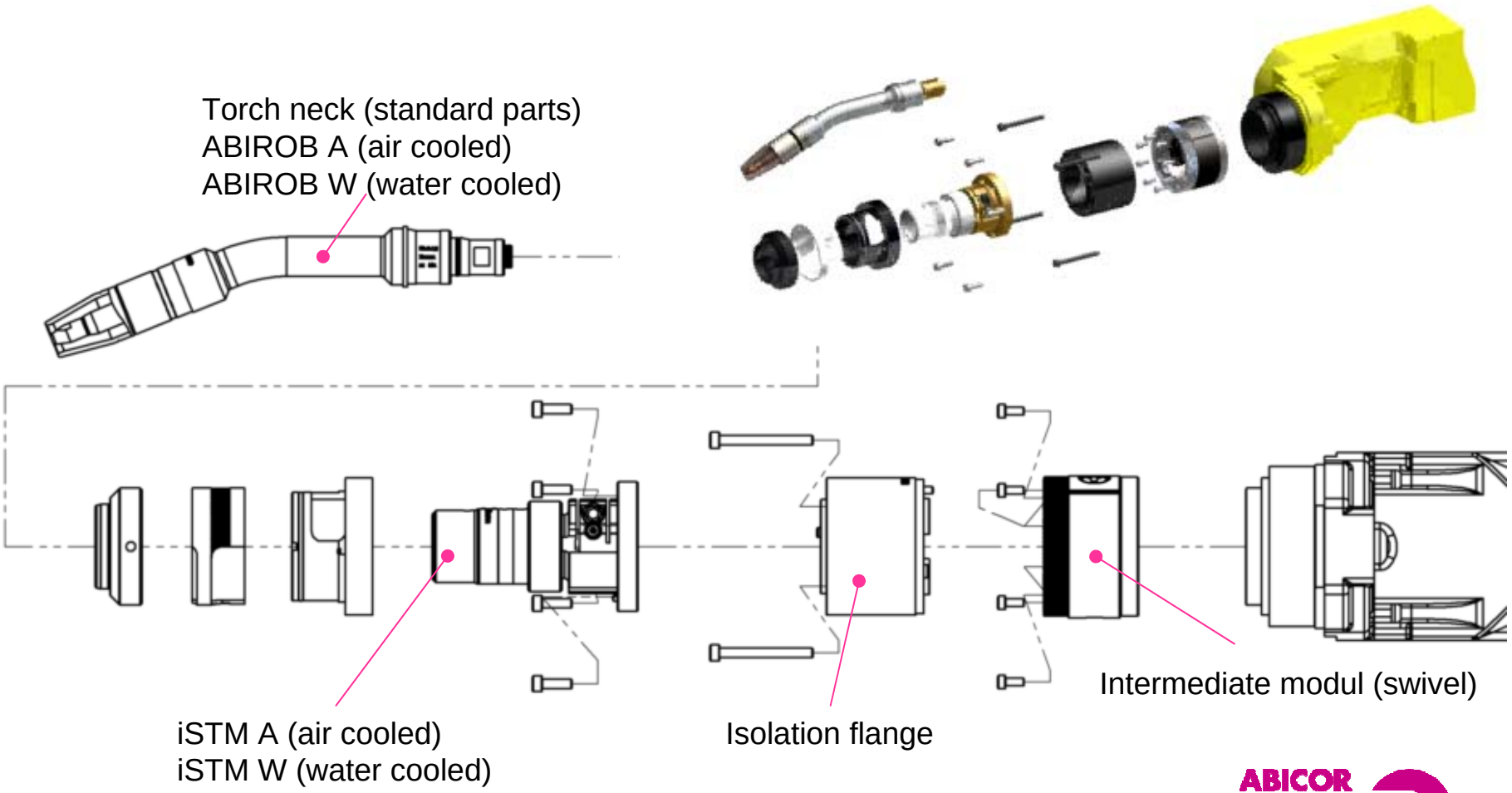

Hollow wrist robots

FANUC® ArcMate 100iC/100iC-6L/120iC/120iC-10L

AIR-COOLED Package iSTM-ABIROB A

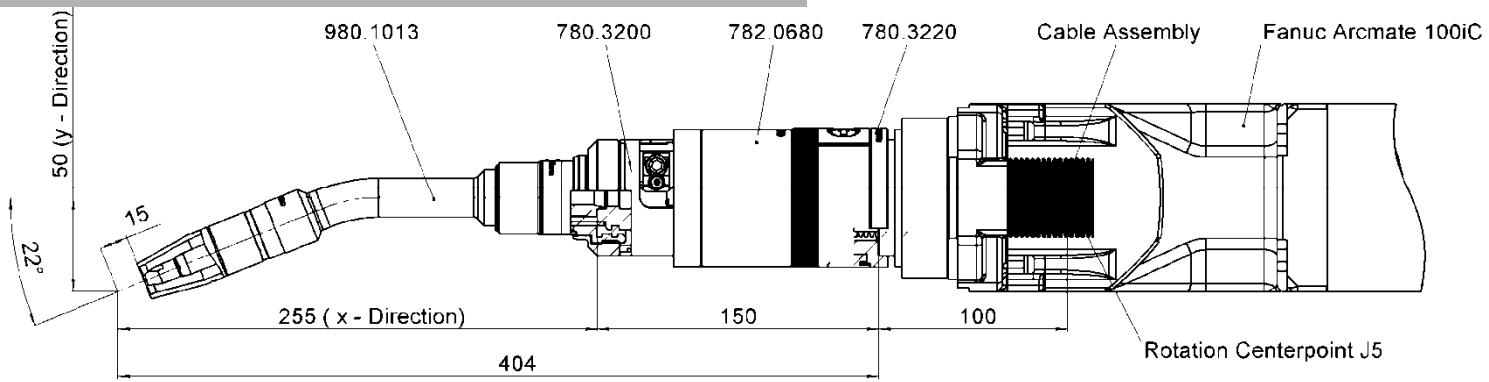

WATER-COOLED Package iSTM-ABIROB W

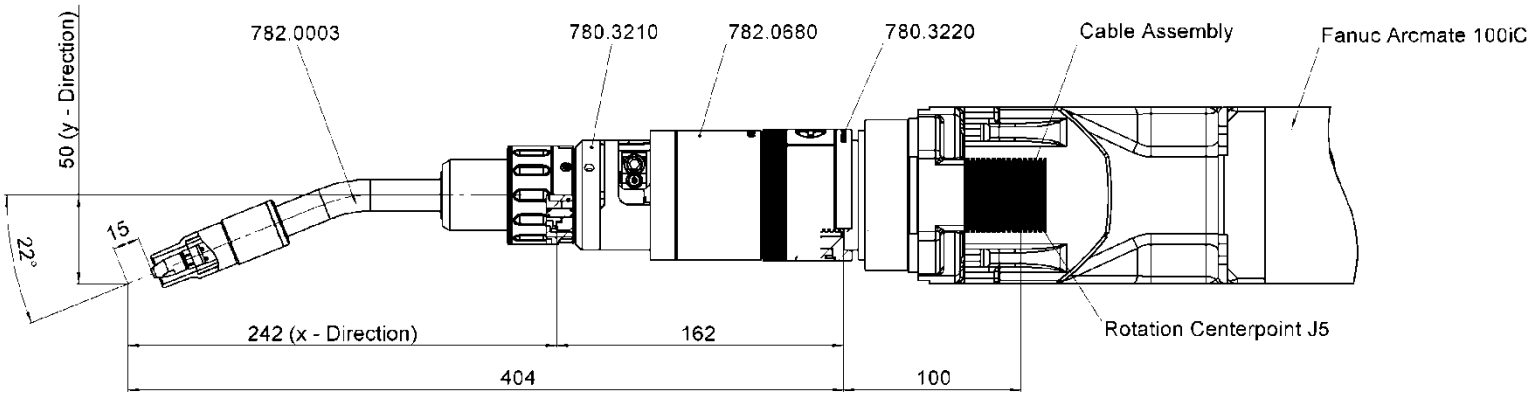

Hollow wrist robots

FANUC® ArcMate 100iC/100iC-6L/120iC/120iC-10L

iSTM WH FANUC – Example USA

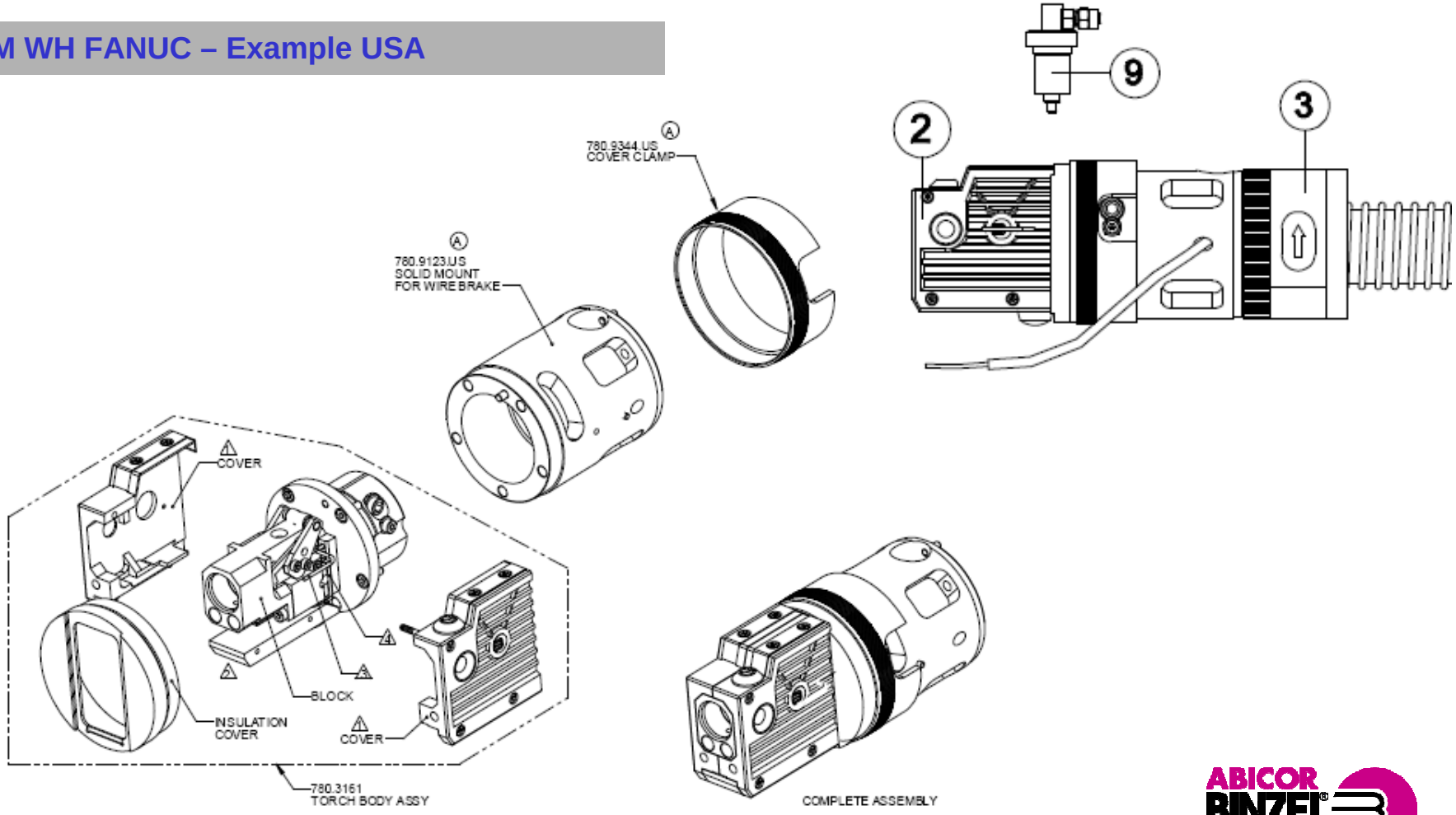

Hollow wrist robots

FANUC® ArcMate 100iC/100iC-6L/120iC/120iC-10L

iCAT with FANUC

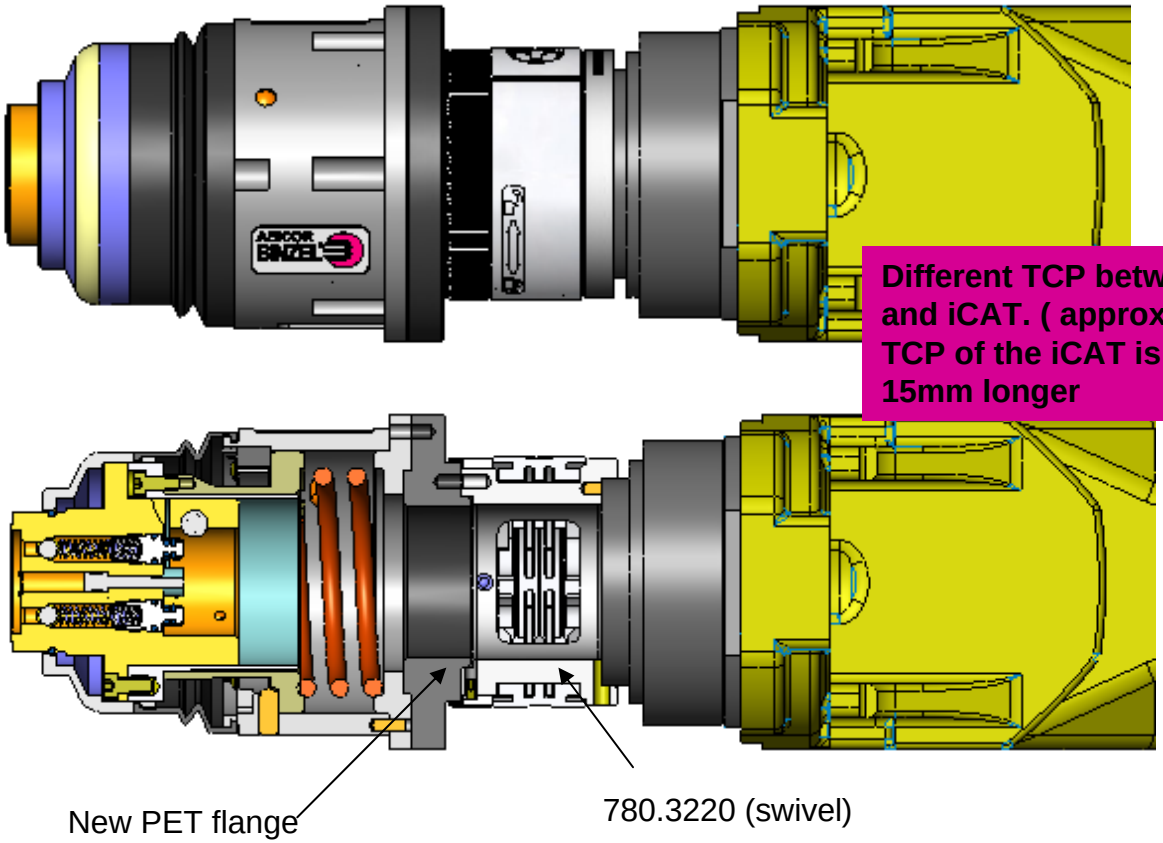

Different TCP between iSTM and iCAT. (approx. 15 mm) TCP of the iCAT is about 15mm longer

Hollow wrist robots

FANUC® ArcMate 100iC/100iC-6L/120iC/120iC-10L

Quelle: FANUC Neuhausen

Hollow wrist robots

Motoman® EA1400N/1900N/1800N/SSA2000

Hollow wrist robots

Motoman® EA1400N/1900N/1800N/SSA2000

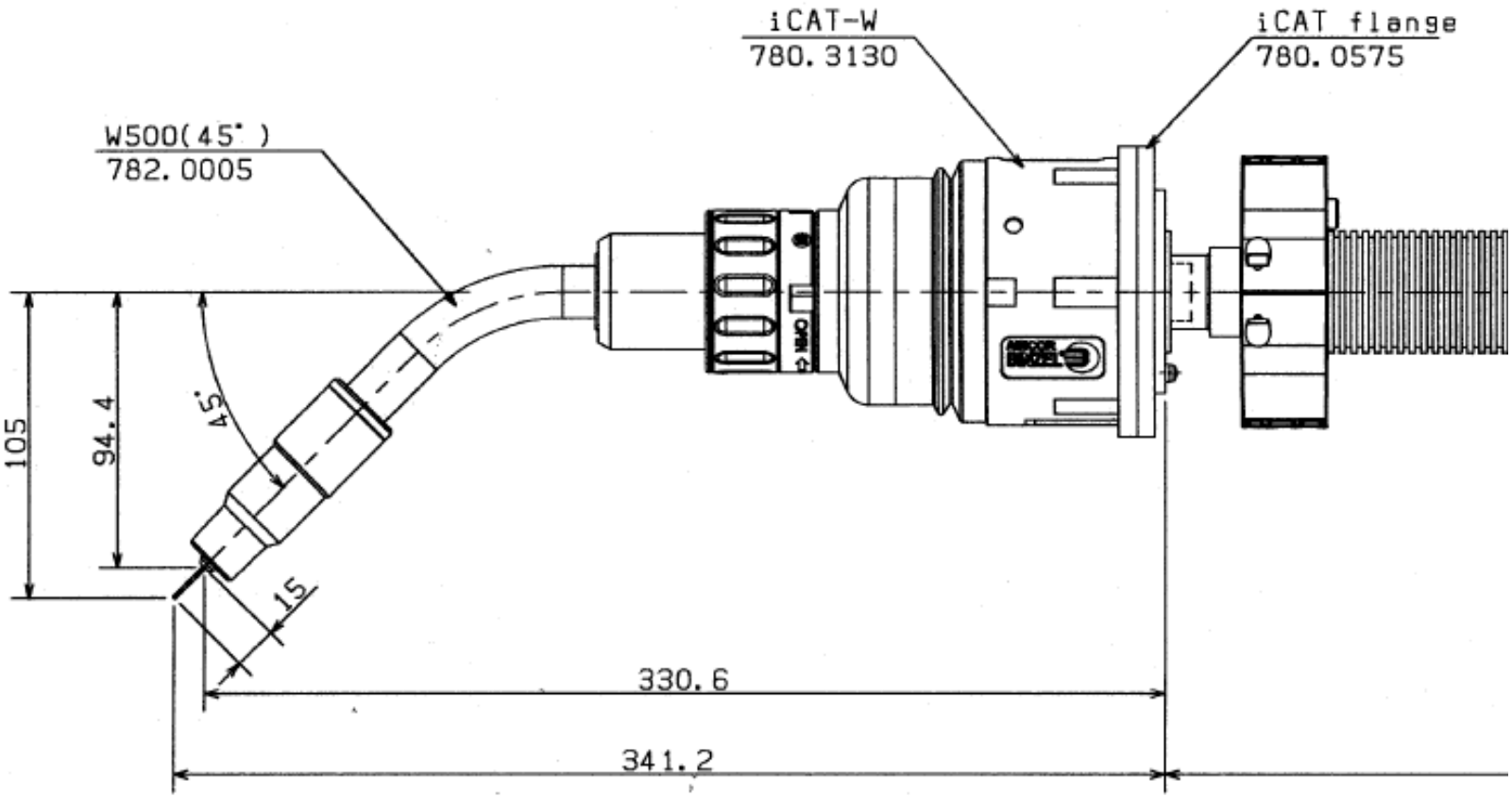

Hollow wrist robots

KUKA® KR5arc HW

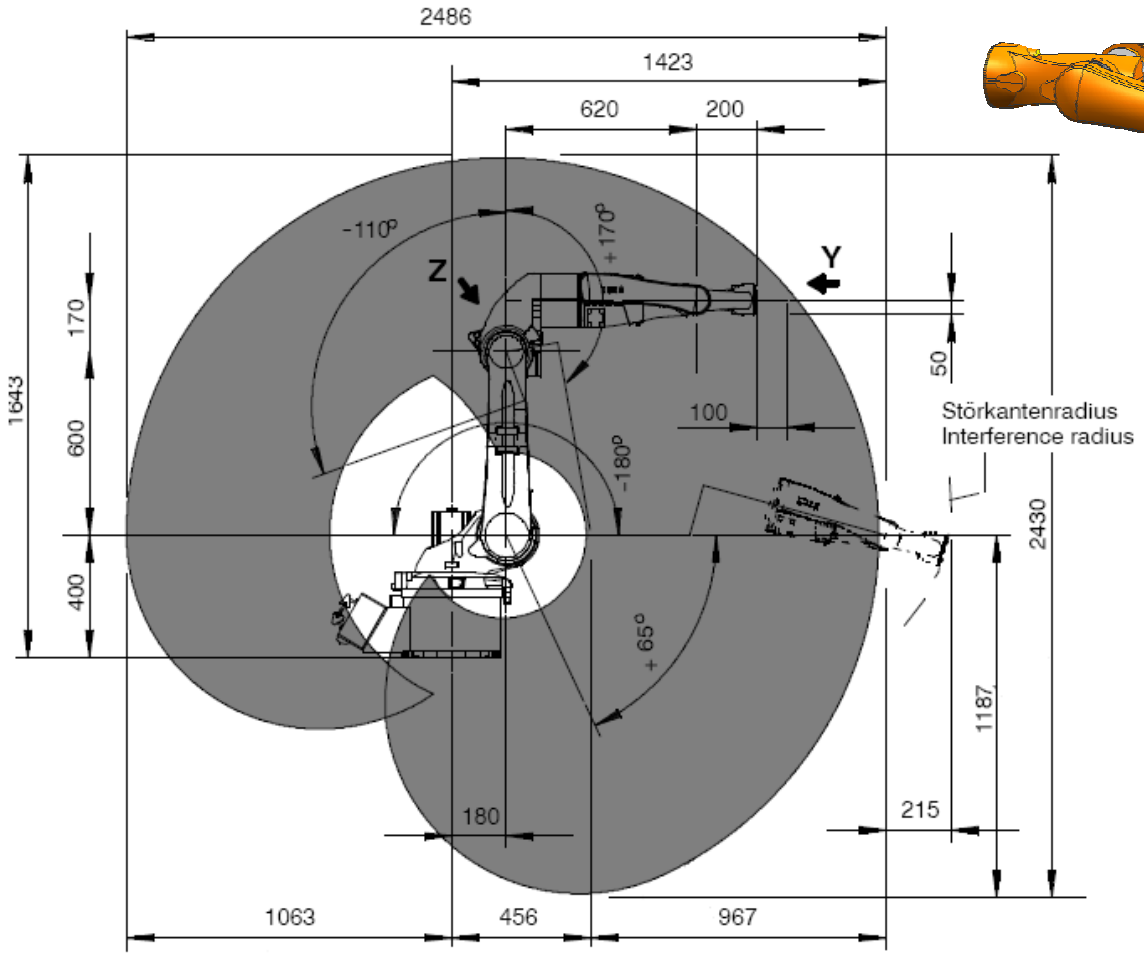

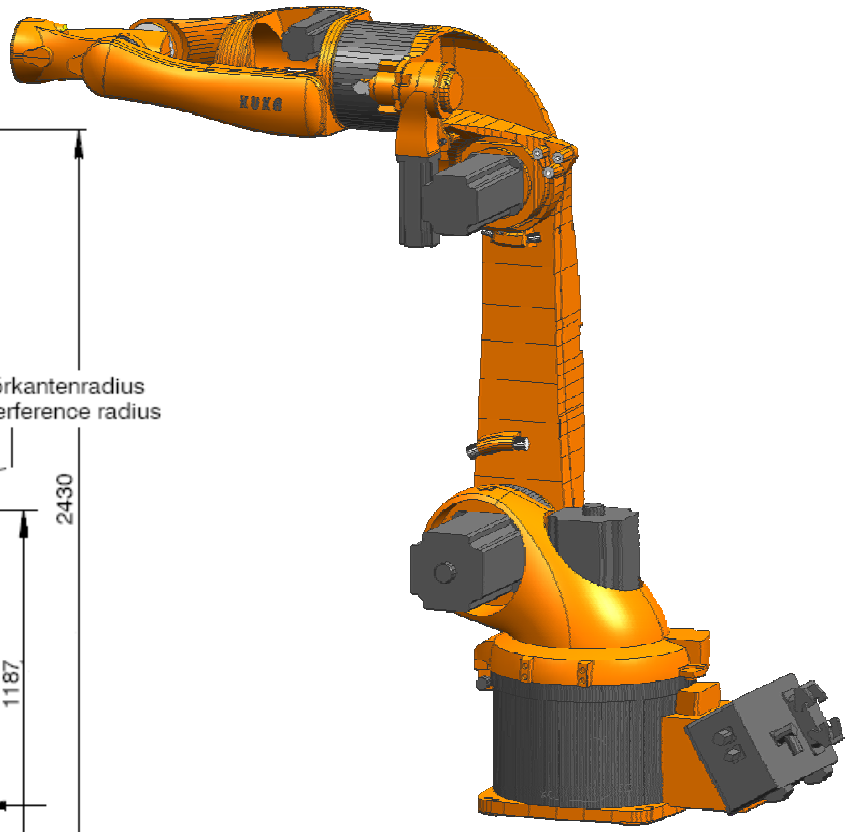

Hollow wrist robots

KUKA® KR5arc HW

		KR5arc HW	KR5arc
Max. speed	J1	156 °/sec	154 °/sec
	J2	156 °/sec	154 °/sec
	J3	227 °/sec	228 °/sec
	J4	390 °/sec	343 °/sec
	J5	390 °/sec	384 °/sec
	J6	858 °/sec	721 °/sec
	Total	2177 °/sec	1984 °/sec

Hollow wrist robots

OTC® Almega AX-V4/AX-V4 L

Hollow wrist robots

OTC® Almega AX-V4/AX-V4 L

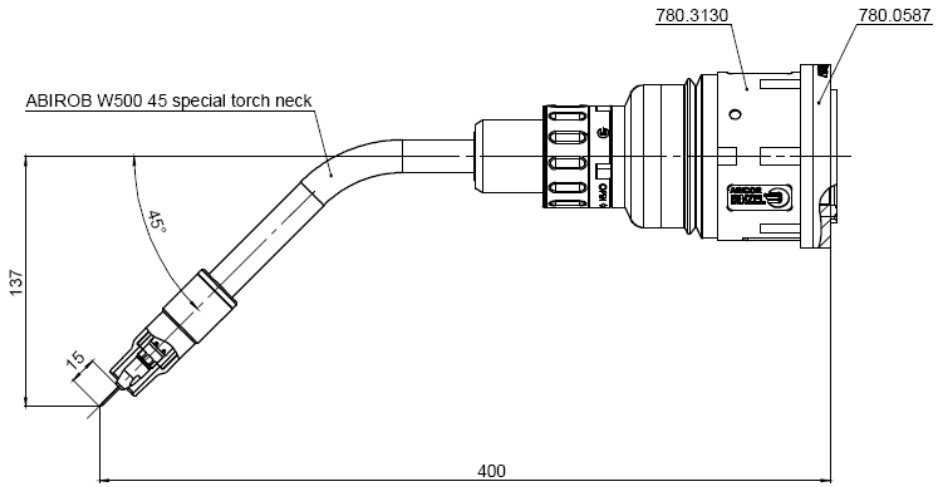

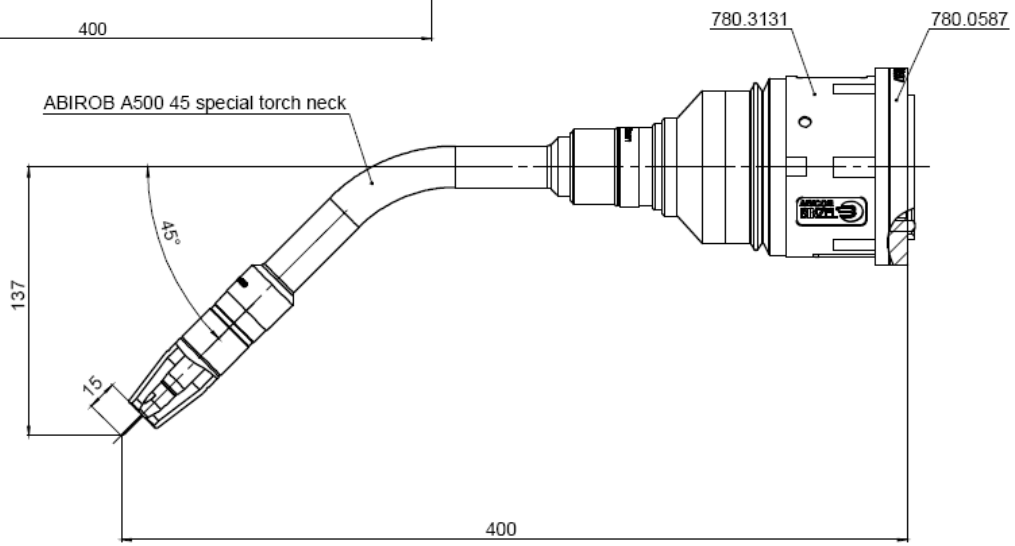

Hollow wrist robots

PANASONIC® Tawers TB1400WG

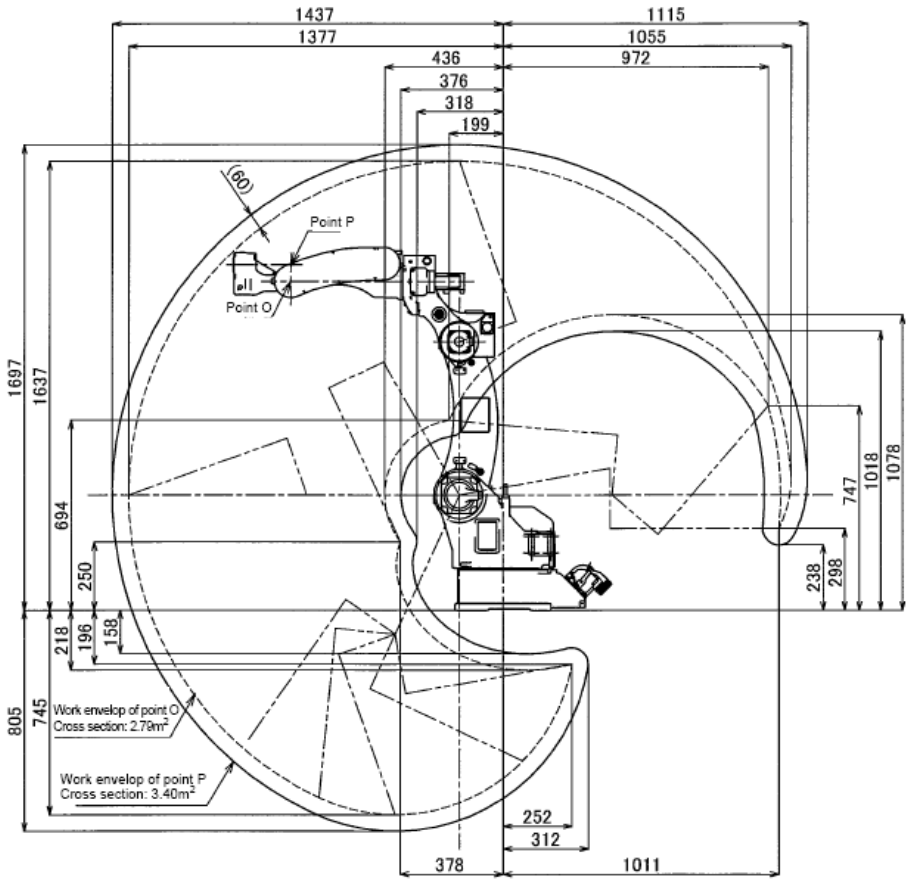

		TB1400WG
Max. speed	J1	170 °/sec
	J2	170 °/sec
	J3	190 °/sec
	J4	340 °/sec
	J5	375 °/sec
	J6	600 °/sec
	Total	1845 °/sec

Hollow wrist robots

Summary

The biggest advantages for the end users are following topics:

- Faster movement
- Longer live time of the cable assembly
- Soft and smooth movements during the welding as there are no problems with collision of the cable assembly
- Easier to use with offline programming

Thank
you
ABICOR
CAT2